Your Solutions Partner

Specifications

F.O.B St. Louis, Missouri 63102

E102-G
(Shown w/optional casters)

OPTIONS:

- ❑ 2-speed fan
- ❑ Natural or Propane
- ❑ Casters

AGENCY LISTINGS:

DUKE MANUFACTURING CO.
2305 N. Broadway
St. Louis, MO 63102

800.735.3853 Toll Free
314-231-1130 In Missouri
314.231.5074 Fax
www.dukemfg.com

Approval Stamp(s):

PRODUCT INFORMATION:
PROJECT: _____
ITEM: _____
QUANTITY: _____

MODEL:

Duke Convection Ovens
"E" Series - Double Section - Gas

□ **E102-G** Double section standard depth

STANDARD FEATURES:
- 5 racks
- Porcelain interior
- 50/50 independent stainless steel doors
- Double pane glass in both doors
- 8" angular stainless steel legs/adjustable feet

OVEN SECTIONS:
- Stainless steel front
- Painted sides, top
- 1-1/2" insulation on bottom, sides & back
- 3" insulation on top
- Interior lights

BURNER SYSTEM:
- 40,000 BTU
- High output atmospheric burner system
- Main gas shut off valve
- Built-in gas regulator

OVEN CONTROLS:
- Power off/cook switch
- Dial type thermostat - 200° - 500°F
- 1-hour dial timer, electric buzzer

SHORT FORM SPECIFICATIONS:

Duke Convection Ovens - "E" Series -Double Section - Gas. Unit shall have stainless steel exterior front, painted sides and top. Bottom, back and sides to be fully insulated with 1-1/2" thick board type insulation, top to have 3" thick insulation. Interior shall be porcelain enameled interior, with 7/8" radius, coved corners. Each section to include 5 oven racks. Each oven section to be powered by 40,000 BTU, high output atmospheric burner system. Ignition system is accomplished with an electronic pilot relight system. Oven shall be furnished with a main gas shut off valve in the control panel area. A built-in gas regulator is standard. Unit to be completely front serviceable. Controls shall be: Power off/cook switch, dial type thermostat to operate from 200° - 500°F, and a 1-hour dial timer with electric buzzer. Built-in gas regulator. Door shall be 50/50 independent stainless steel, insulated, and hinged on 5/8" solid stainless steel shafts with oil impregnated bronze bushings for each door. Double pane glass in both doors standard. Door to have roller style latch and catch mechanism. Legs shall be angular, 8" high stainless steel, with adjustable feet. Units shall have the following options: 2-speed fan & casters. Limited 1 year warranty on parts and labor.

Catalog No. DCO-EGASD

A.I.A. File No. 35-C-13

A.I.A. File No. 35-C-13

Catalog No. DCO-EGASD

DUKE CONVECTION OVENS - "E" SERIES - DOUBLE - GAS

DUKE CONVECTION OVENS
"E" SERIES - DOUBLE SECTION - GAS

■ ***E102-G*** Double section, standard depth

Gas Specifications		
	BTU/Hour	
E102-G	40,000	
Regulated gas pressure required 3.5" WC natural /10" WC propane		
Combustible surface clearance - 1" side, 1" rear, 6" floor		
■ - Gas connection		
3/4" Gas connection		
Electrical requirements: 3.5 Amps/ 115V		
Standard 115V units supplied with 5' cord and plug		

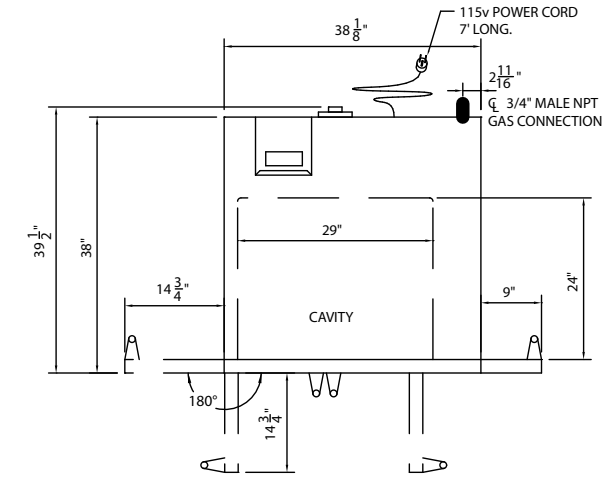

TOP VIEW

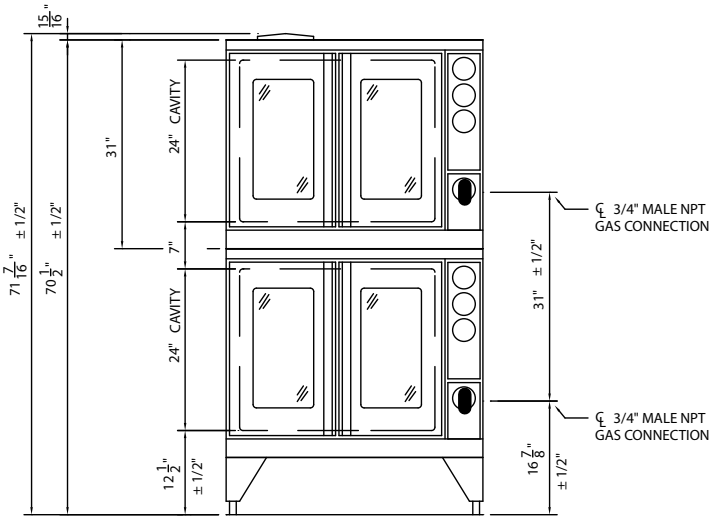

FRONT VIEW

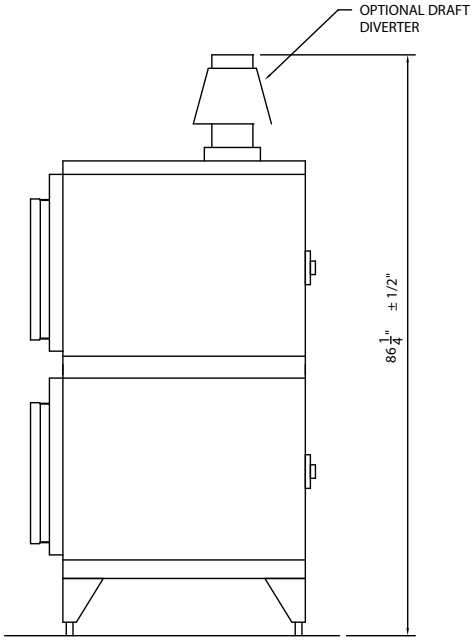

RIGHT SIDE VIEW

DIMENSIONS:

FREIGHT CLASS: 85

Model	Depth		Width		Height		Cube ft. crated	Weight	
	in	cm	in.	cm	in.	cm		lbs	kg
E102-G	39-1/2	100.3	38	96.5	70-1/2	179.1	69.7	1080	490.9

Specify gas type
Specify altitude over 2000 feet

DUKE MANUFACTURING CO.
2305 N. Broadway
St. Louis, MO 63102

800.735.3853 Toll Free
800.231.1130 In Missouri
314.231.5074 Fax
www.dukemfg.com

Your Solutions Partner

Specification subject to change

01/10
Printed in U.S.A

© 2010, Duke Manufacturing Co.