Hot Food Tables

Operation•Installation•Maintenance Manual

for Electric & Gas Hot Food Tables
version 2.0

Please read this manual completely prior to installation and/or operation. This unit is designed for commercial use only. Notify the carrier of any damage upon receipt. This manual must be retained for future reference.

SupremeMetal
Quality food service equipment since 1929

3125 Trotters Pkwy
Alpharetta, Ga 30004

Phone: 800-645-2526
770-740-6000

Fax: 770-740-6010

email: info@supremetal.com

Assembly:

1. This unit is shipped with the under shelf (item 4) upside down and attached to the bottom of the body assembly (item 1) with the shipping straps (item 2). The 4 legs (item 6) are at each corner and on top of the undershelf (item 4).
2. Remove the unit from the shipping box, and place it upside down as shown in figure 1.
3. Remove and discard shipping straps. (item 2)
4. Loosen each leg (item 6), turn it straight up and re-secure each with the 1/4-20 machine screws (item 9).
5. Invert the shelf and leg assembly, setting it down upon the inverted body assembly (see figure 2). If assembled correctly , the unused holes in the in the legs will line up with the unused holes in the body assembly corner post holes. Secure them with the 1/4 -20 machine screws (item 9).
6. Turn the entire unit over so that it now rests on the bullet feet.
7. Attach cutting board support brace (item 5) to the body with 1/4 - 20 screws (item 8) to threaded holes that are provided. (Figure 3)
8. Attach cutting board (item 3) to the cutting board support brace with the 1/4 - 20 thumb screws (item 10) and the 1/4 washers. (item 13)
9. Use the nylon x-mas tree plugs (item 12) to cover the bracket holes that are not used after assembly has be completed.

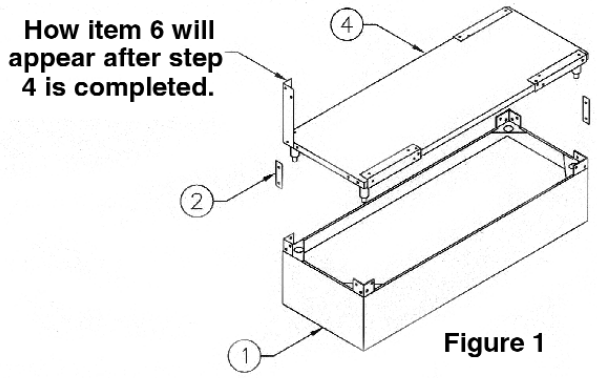

Figure 1

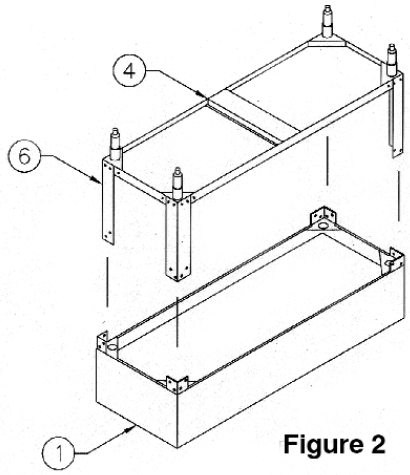

Figure 2

Item	Qty.	Description
1	1	Hot Food Table Body
2	4	Shipping Strap
3	1	Cutting Board
4	1	Undershelf
5	3	Cutting Board Support Brace
5a	1	Xtra Brace for 4&5 wells
6	4	Legs
7	1	Screw Pack

Screw Pack Contents

Item	Qty.	Description
8	8	1/4-20 x 1/2 machine screw
9	21	1/4-20 x 1/2 s/t screw
10	4	1/4-20 x 1/2 thumb screw
11	21	1/4 internal tooth lock washer
12	8	1/4-20 nylon x-mas trees
13	4	1/4 flat washer

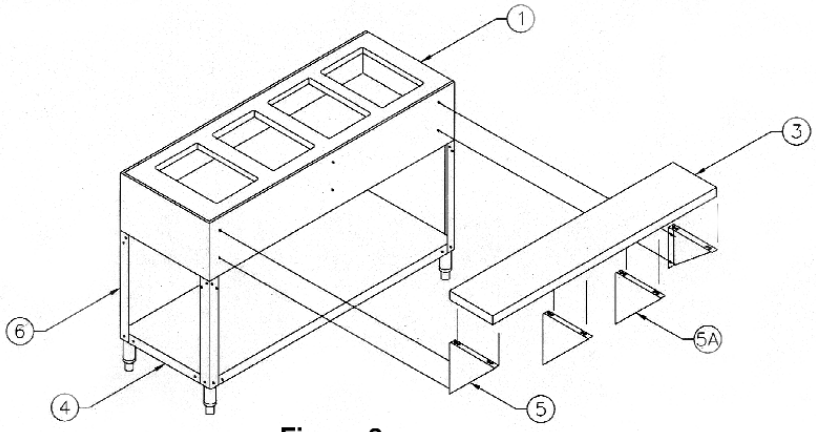

Figure 3

Installation:

1. Upon completion of assembly you should first choose a proper location for the unit. Take care when placing unit, do not place unit near any flammable or heat sensitive surfaces.
2. Each unit comes with a three pronged plug and a 6' cord. You must plug this hot food table in to a matching three pronged outlet.
3. For the first time that this unit will be used, you need to turn the knob to high and let it heat up and remain on for 30 minutes. This will burn off any residue on the heating element. Some smoke may appear, this is normal.

Operation:

For dry use: (Electric & Gas Hot Food Models)

1. Never place food or water directly into the wells.
2. Place empty spillage pan in well and cover, turn on the unit to the **high** mark and heat for about 30-35 minutes. Each well will need to be pre-heated in this same manner.
4 Place already cooked food in the wells and cover. (Food must be cooked prior to inserting the food into the hot food table. These tables are designed for maintaining the food temperature for serving only. Food must be heated to at least 150° prior to insertion.)
3. Set desired holding temperature using the guidelines below.

For wet use:

1. Never place food or water directly into the wells.
2. Fill spillage(water) pan with 1" of hot tap water.
3. Turn well onto the **high** mark and heat for 35-40 minutes. Each well will need to be pre-heated in this same manner.
4. Place already cooked food in the wells and cover. (Food must be cooked prior to inserting the food into the hot food table. These tables are designed for maintaining the food temperature for serving only. Food must be heated to at least 150° prior to insertion.)
5. Set desired holding temperature.
6. Maintain water level in pan through the shift.

Electric Hot Food Tables Guidelines

Recommended Food Storage Temperatures

Setting	Temperatures	Food Types
Lo - 3	140°-150°F	Creamed Foods-Mashed Potatoes
3 - 5	150°-170°F	Roasts,Baked Ham,Cutlets,Fish,Stews,Short Ribs Fried Liver, Fried Chicken,Croquettes,Vegetables Baked Beans, Fried Potatoes, & Medium Gravies
5 - Hi	170°-200°F	Baked Potatoes,Barbecued Ribs, Dressing Thin Gravies and soups.

Gas Hot Food Tables Guidelines

Recommended Food Storage Temperatures

Setting	Temperatures	Food Types
Lo	150°-160°F	Creamed Foods-Mashed Potatoes
Medium	160°-180°F	Roasts,Baked Ham,Cutlets,Fish,Stews,Short Ribs Fried Liver, Fried Chicken,Croquettes,Vegetables Baked Beans, Fried Potatoes, & Medium Gravies
Hi	180°-200°F	Baked Potatoes,Barbecued Ribs, Dressing Thin Gravies and soups.

Warning!
Make sure that the units voltage is the same as the incoming voltage. If you are not sure check the label on the unit for specifications.
Plugging or wiring the unit into a lesser voltage may damage certain components or cause the unit to not preform correctly. Plugging it into a higher voltage may cause severe damage to the components.

Cleaning:

Daily Cleaning:
1. Turn all wells off and let unit completely cool.
2. Remove all water and food pans.
3. Use a soft cloth with a mild detergent to wipe down the entire unit, rinse, and then dry.
4. You may use a plastic scouring pad to remove any hardened food particles.

Warning: Do not use steel wool or any caustic cleaners (bleach, ammonia, or acidic properties). These items will damage and corrode the surface.

Weekly Cleaning:
1. A de-scaling agent that is approved for use on stainless steel should be used to clean the scale deposits that will occur due to the mineral content of some water sources.
2. Rinse hot food table thoroughly with a vinegar and water solution to neutralize all detergent and cleaner residue.
3. Allow unit to remain open while it dries completely.

Warranty and Service Guide:

SupremeMetal, Inc. Limited Warranty

SupremeMetal Inc. warrants that all units manufactured will be free from defects at the time of shipment. Warranty is valid for 1 year from the date of installation or no more than 2 years from date of shipment. This warranty applies to manufactured or component parts. Contact the SupremeMetal Customer Service Department for a listing of authorized service agencies. SupremeMetal Inc. is not responsible for damage, or business loss of any kind resulting from defective unit or installation of replacement unit.

TERMS AND CONDITIONS OF WARRANTY

1. To original user only. Bill of Sale must be submitted with all claims.
2. Claims must be made to manufacturer within 30 days of discovery of defect.
3. Manufacturer may provide service by authorized agency for 90 days after installation of unit free of charge.
4. Defective units, if necessary, will be freight prepaid by shipper for inspection.
5. Replacement units, if necessary will be freight prepaid by manufacturer.
6. This warranty may be rescinded by manufacturer without prior notice.
7. Any claim under this warranty must be made in writing to SupremeMetal, Inc.

WARRANTY VOID IF:

1. Unit has been transferred from the original user.
2. Unit is serviced by person other than an authorized agency, or not in compliance with local code.
3. Unit is altered or modified in any way.
4. Unit has any accessory parts affixed which are not recommended or installed by manufacturer.
5. Unit is installed outside the continental United States.

Service:
For warranty service please contact your equipment dealer or Supreme Metal's customer service department @ 800-645-2526.