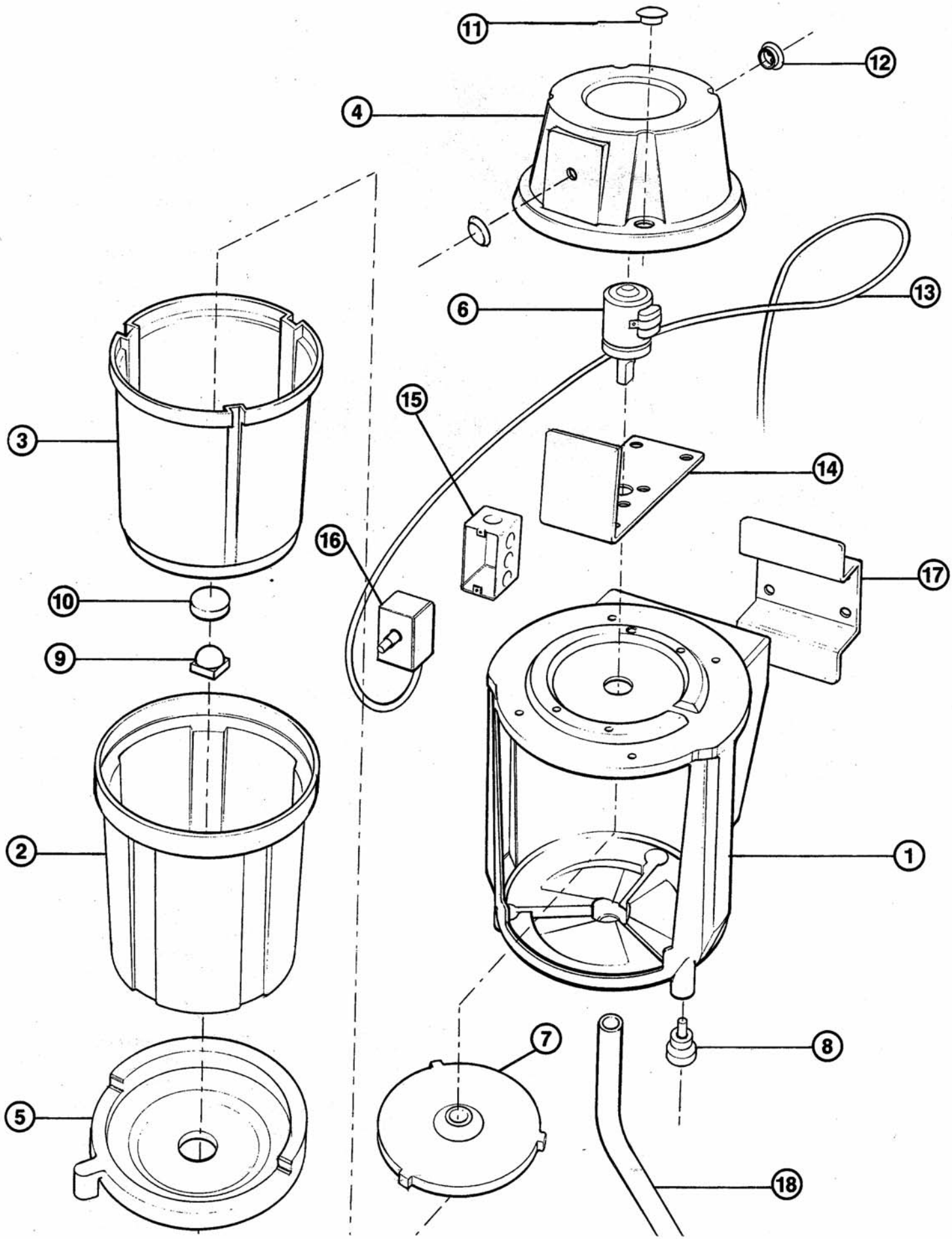
11
12
4
6
13
3
15
14
16
17
10
9
2
1
7
8
5
18

The Greens Machine – VSD-10

Salad & Vegetable Dryer

Fig.	Old #	New #	Name
			Major Components
1	31001	0US149	Main Body
2	31002	0US132	Outer Basket
3	31003	653633	Inner Basket
4	31004	0US152	Motor Cover
5	31005	0US151	Riser Plate Complete
6	31006	0US021	Motor w/Capacitor
7	31007	0US153	Flywheel
			Minor Components
8	31-003	0US011	Foot/Threaded Stem
9&10	31-050	0US432	Pivot Ball/Cup Assembly
11	31-015	0US254	Plug, Dome Cover
12	31-016	0US253	Plug, Cover Vent
13	1021	0US197	Cord w/Plug
14	31-017	0US027	Bracket, Motor
15	31-029	0US165	Junction Box for Timer
16	30-0004	0US171	Timer
17	31-008	0US144	Wall Mounting Kit Complete
18	31-034	0US008	Hose, Drain (5 feet)

Qty. Req'd	Old Part#	Items Not Shown	Name
			Screws & Washers
4	31-010	0US149	Screw/Pivot Cup
4	31-013	0US078	Screw 10 x 24 x 1/2 HEX
4	22-5011	0US059	Washer/Flat 5x20mm
4	31-022	0US080	Washer/Motor Mounting
2	31-026	0US081	Screws/Flywheel Allen Head
2	31-021	0US079	Screws/Junction Box
2	21-0141	0US111	Nut/Junction Box 5mm HEX
1	31-051	0US087	Screw Timer
			Miscellaneous
1	31-039	0US328	Grommet/Motor Bracket
1	31-044	0US314	Label/Caution
1	31-037	0US291	Label/Greens Machine
1	31-047	0US007	Drain Pipe Fitting
1	31-007	0US166	Knob/Timer
			Wall Mounting
1	31-032	0US028	Wall Bracket
4	31-033	0US083	Bolts
4	31-038	0US329	Rubber Bumper
4	31-040	0US084	Lag Shield

Dimensions

Height:	33-1/2''
Diameter:	21''
Net Weight:	48 lbs.
Shipping Weight:	49 lbs.
Space Required:	21'' x 33-1/2''
Gravity Drain:	1-1/2'' wide
Electrical	115/60/1 1.29 AMP

Inner Liner

Capacity:	10 gal.
Diameter:	13''
Depth:	14''