1806 CFL VAPOR-PROOF LIGHT FIXTURE

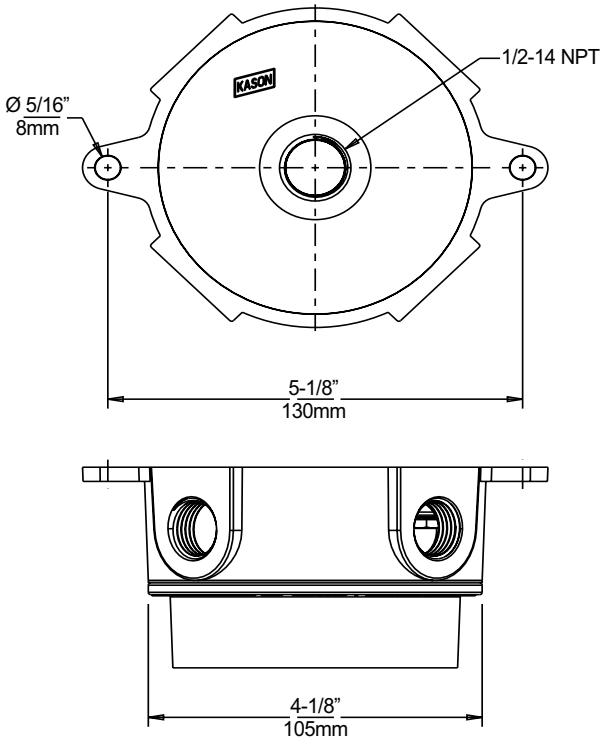

Model No.	Item	Quantity per Carton	Weight per Carton
1806LG0000	Fixture with Lexan Globe & 1/2" NPT	25	49 lb. (22kg)
1806LG0LMP	Fixture with Lexan Globe,1/2" NPT & 26W SB CFL Lamp	25	53 lb. (24kg)
1806LG0034	Fixture with Lexan Globe & 3/4" NPT	25	49 lb. (22kg)
1806000010	Retrofit Kit for 1802LG, 1803LG & 1804LG Fixtures	50	20 lb. (9kg)
1806LG0003	Junction Box for 1806LG & 1807LG	25	25 lb. (11kg)
1806LG0004	Junction Box for 1806LG & 1807LG with 3/4" NPT	25	25 lb. (11kg)
1806SC2627	26W SB CFL Lamp	48	14 lb. (6kg)

LIGHT DISTRIBUTION ON FOLLOWING PAGE

© 2009 Kason Industries, Inc.

1806 CFL LIGHT DISTRIBUTION

LIGHT DISTRIBUTION FOR 1806 & 1807					
Height in Feet	Average FC for Single Fixture Over Indicated Area				
	4' x 4'	8' x 8'	12' x 12'	16' x 16'	20' x 20'
4	21.3	15.8	11.7	8.9	7.0
5	14.4	11.5	9.0	7.1	5.7
6	10.3	8.7	7.1	5.8	4.8
7	7.8	6.8	5.7	4.8	4.0
8	6.0	5.4	4.7	4.0	3.4
9	4.8	4.4	3.9	3.4	3.0
10	3.9	3.6	3.3	2.9	2.6
11	3.3	3.1	2.8	2.5	2.2
12	2.7	2.6	2.4	2.2	2.0

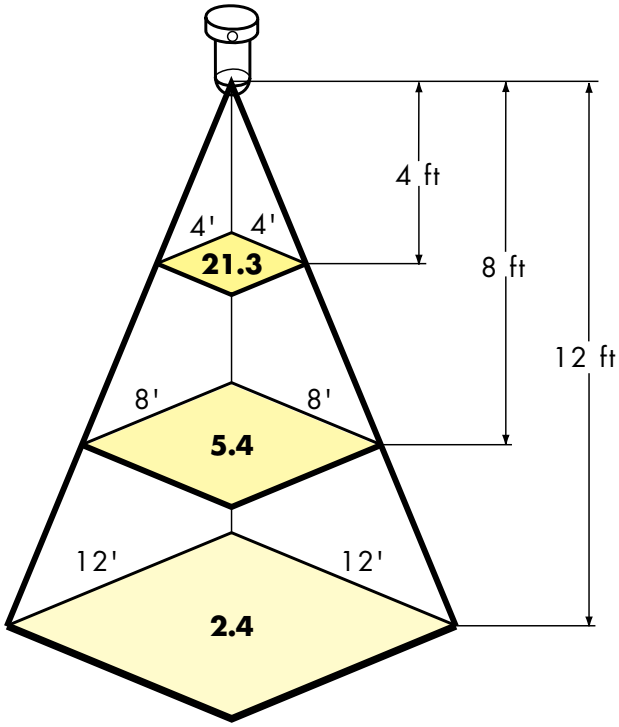

© 2009 Kason Industries, Inc.