Ice Machine Parts List for Series Q270 Models

QR0270A	**QD0273W**
QR0271W	**QY0274A**
QD0272A	**QY0275W**

Q270 CONTROL BOX

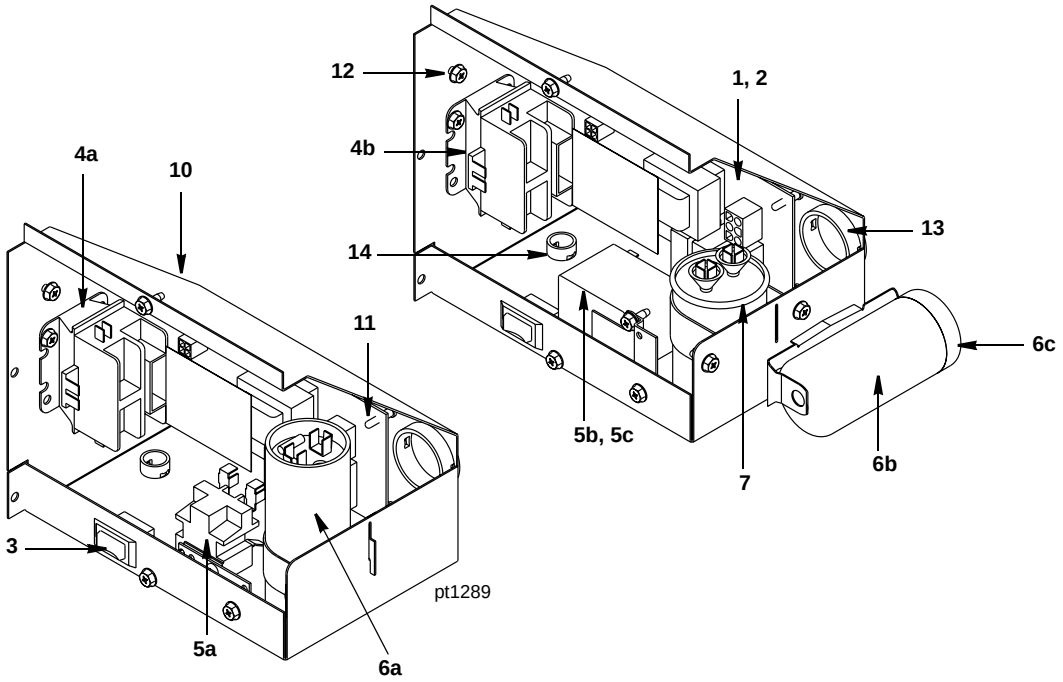

	DESCRIPTION	PART NO.
1	Control Board (for use with all voltages)	† 76-2907-3
2	10 Amp Fuse – Mounted on Control Board	25-1149-3
3	**Toggle Switch** Only	23-0151-3
	a. Wiring Harness Only	20-3248-3
4	**Contactor**	
	a. 115V/60 Hz/1 Ph	† 20-0656-9
	b. 230V/50-60 Hz/1 Ph	† 20-0657-9
5	**Start Relay** Techumseh (for Danfoss see page 4)	
	a. 115V/60 Hz/1 Ph	85-0374-3
	b. 230V/60 Hz/1 Ph	85-0455-3
	c. 230V/50 Hz/1 Ph	85-0448-3
6	**Start Capacitor**	
	a. 115V/60 Hz/1 Ph	85-0577-3
	b. 230V/50-60 Hz/1 Ph	85-0576-3
	c. Capacitor End Cap	85-0579-3
7	**Run Capacitor** 230V/50-60 Hz/1 Ph	85-0400-3
8	**Wiring Harness**	
	a. Air-Cooled 115V/60 Hz/1 Ph (Not shown)	20-3315-3
	b. 230V/50-60 Hz/1 Ph (Not shown)	20-3316-3
	c. Water-Cooled 115V/60 Hz/1 Ph (Not shown)	20-3313-3
	d. 230V/50-60 Hz/1 Ph	20-3314-3
	e. Ice Thickness Control Probe (Wire Lead and Connectors Only)	20-0700-3
	Ice Thickness Control Probe (Wire Lead and Connectors Only)	76-0160-3
9	**Power Cord**	
	a. 125V/60 Hz (Not shown)	20-3301-3
	b. 230V/60 Hz (Not shown)	20-3303-3
	c. 230V/50 Hz (Not shown)	20-3302-3
	Miscellaneous – Brackets, Screws, etc.	
10	Control Box	603461-1
11	Control Board Mounting Supports	43-0225-3
12	Screw, #10-24 x .50 Ground	† 52-0216-9
13	Bushing	† 25-0013-9
14	Bushing	† 25-0218-9

† Refer to Cross Reference Guide

Q270 EVAPORATOR COMPARTMENT

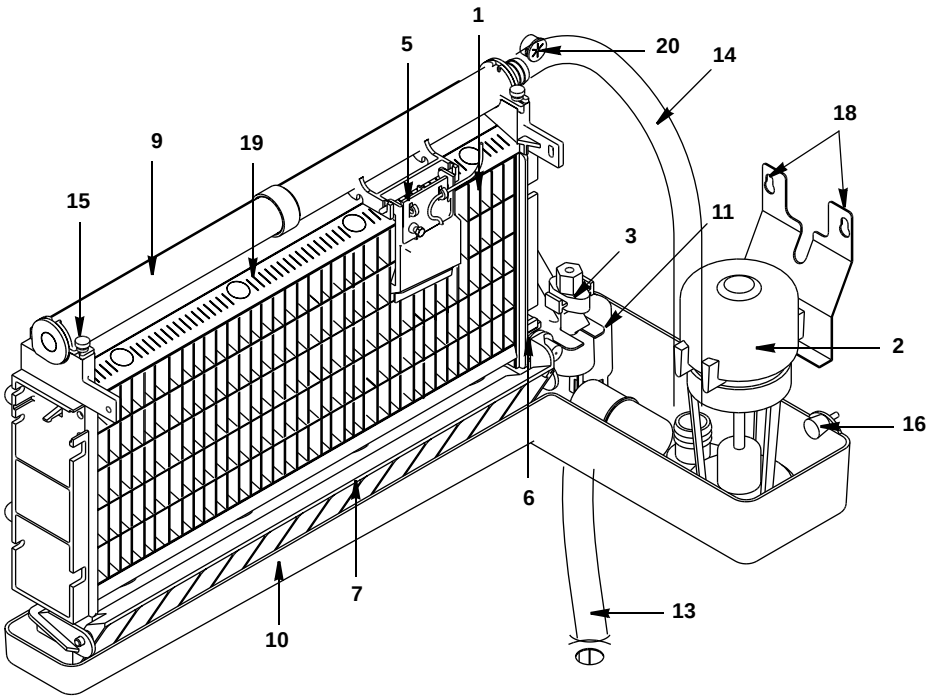

DESCRIPTION		PART NO.
1	**Evaporator Assembly**	
	a. Regular Cube	† 76-2954-9
	b. Dice Cube	† 76-2955-9
	c. Half Dice Cube	† 76-2956-9
2	**Water Pump**	
	a. 115V/60 Hz	† 76-2306-3
	b. 208-230V/60 Hz or 230V/50 Hz	† 76-2601-3
3	**Float Valve (Complete Assembly) - Up to Serial Number 031100000**	† 76-0213-3
4	**Float Valve (Complete Assembly) - After Serial Number 031100000**	83-6904-9
	a. Float Valve Screen	† 83-6906-9
	b. Float Valve Plunger	† 83-6908-9
	c. Float Valve Compression Nut	† 56-5072-9
5	Ice Thickness Control Probe	† 76-0160-3
6	Magnetic Bin Switch (Mounted to Evaporator)	† 76-0161-3
7	Water Flow Clamp (Not shown, used on Regular Cube Only)	76-2054-3
8	Ice Damper	† 76-0048-3
	a. Ice Damper Magnet and Cap	76-2909-3
9	Water Distribution Tube	† 76-2498-3
10	Water Trough	43-0386-3
11	Water Inlet Tubing (Not shown)	44-2029-1
12	Siphon Cap	43-0222-3
Miscellaneous – Brackets, Screws, etc.		
13	Drain Tube	† 44-0013-3
14	Tubing (Water Pump Out)	40-1205-3
15	Screw, #8-32 x .63 Nylon Water Distribution Tube Mounting	† 50-0001-3
16	Thumbscrew, #8-32 x .625	53-0510-3
17	Screw, #10-24 x .750 – Used to Mount Evaporator (Not shown)	† 52-0218-9
18	Screw, #10-24 x .50	† 52-0206-9
19	Evaporator Top Molding and Gasket Assembly	76-2621-3
20	Bushing (Ice Thickness Probe Wire)	† 25-0016-9
21	Water Pump Lead (Not Shown)	20-7806-3

† Refer to Cross Reference Guide

Q270 REFRIGERATION COMPARTMENT – COMMON PARTS

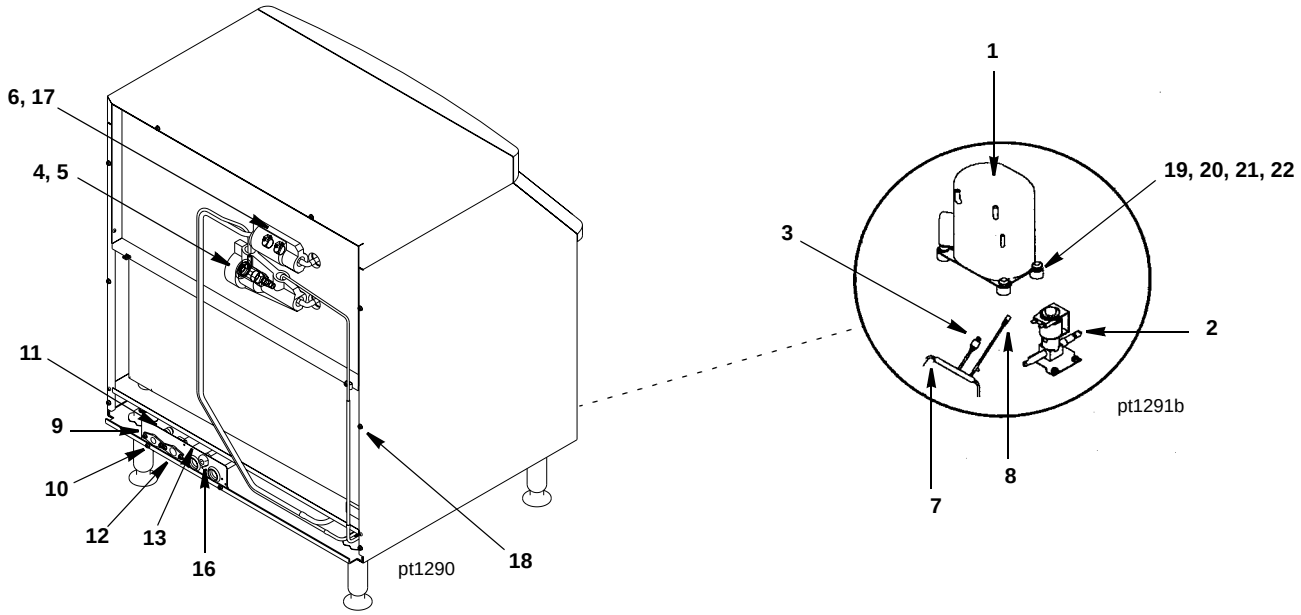

DESCRIPTION	PART NO.
1 **Compressor**	
a. 115V/60 Hz/1 Ph (Tecumseh)	† 76-2936-3
Overload for Compressor	85-0573-3
b. 115V/60 Hz/1 Ph (Danfoss)	76-0134-3
Starting Device (Danfoss)	82-5103-3
Start Capacitor (Danfoss)	82-5102-3
c. 208/230V 60 Hz/1 Ph (Tecumseh)	† 76-2937-3
Overload for Compressor	85-0574-3
d. 208/230V 60 Hz/1 Ph (Danfoss)	76-0135-3
Starting Device (Danfoss)	20-0224-3
Start Capacitor (Danfoss)	82-5109-3
e. 224/240V 50 Hz/1 Ph (Tecumseh)	† 76-2938-3
Overload for Compressor	85-0575-3
f. 224/240V 50 Hz/1 Ph (Danfoss)	76-0135-3
Starting Device (Danfoss)	20-0224-3
Start Capacitor (Danfoss)	82-5109-3
2 **Hot Gas Valve**	
a. Hot Gas Valve Including 115V 60 Hz Electrical Coil (Danfoss)	† 76-3001-1
b. Hot Gas Valve 115V Coil Only Danfoss	20-0176-3
c. Hot Gas Valve 115V Coil Only Alco	24-0436-3
d. Hot Gas Valve Including 208/230V 50/60 Hz Electrical Coil (Danfoss)	† 76-3007-1
e. Hot Gas Valve 208/230V 50/60 Hz Coil Only Danfoss	20-0177-3
f. Hot Gas Valve 208/230V 50/60 Hz Coil Only Alco	† 24-0448-3
3 High Pressure Cut-out	† 20-0124-3
4 Expansion Valve	† 76-0017-3
5 Expansion Valve Body Insulation Boot	
a. Alco	40-0721-3
b. Danfoss	40-0036-3
6 Expansion Valve Bulb Insulation Boot	40-0720-3
7 Manifold Strainer (in front of hot gas valve)	83-1016-3
8 Access Valve	83-7325-3
Miscellaneous – Brackets, Screws, etc.	
9 Bracket (Water/Electrical Inlet)	603460-1
10 Water Inlet Female Wing Adapter	† 87-0609-3
11 Male Connector 1/4" OD x 1/8" NTPF	13-6096-1
12 Bin Drain Female Wing Adapter	87-0608-3
13 Bin Drain Tubing (Molded)	44-2146-3
14 Bin Drain Hose Clamp (Not shown)	† 56-5064-9
15 Water Inlet Tubing .375 ID	44-2029-1
16 Strain Relief (Electrical Cord)	25-0228-3
17 Clamp, Expansion Valve Bulb	† 56-5052-9
18 Screw, #10-24 x .50	† 52-0206-9
19 Compressor Mounting Rubber Grommet	85-0306-9
20 Compressor Mounting Washer	† 55-7309-9
21 Compressor Hex Head Cap Screw	† 50-3770-9
22 Compressor Mounting Sleeve 3/8" ID x 1.031	† 85-0394-9

† Refer to Cross Reference Guide

Q270 REFRIGERATION COMPARTMENT – AIR-COOLED

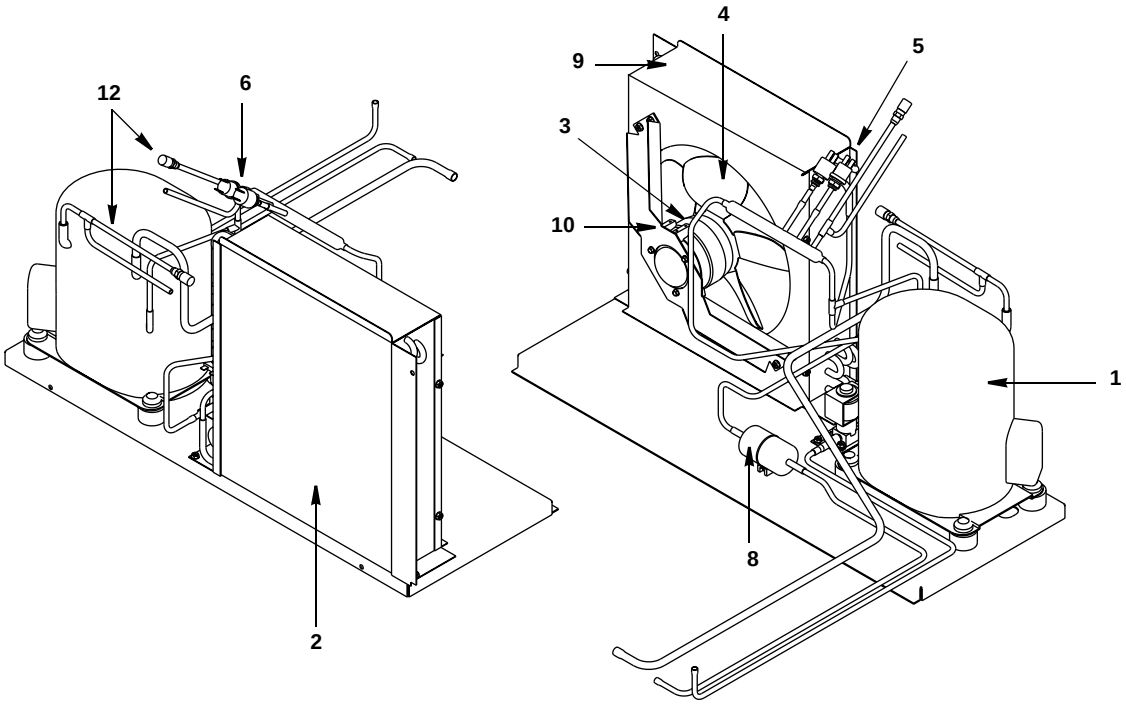

DESCRIPTION		PART NO.
1	Compressor (Refer to COMMON PARTS Page)	Page 4
2	Air Condenser	88-5138-3
3	**Fan Motor**	
	a. 115V	† 24-1281-3
	b. 208-230V/60 Hz or 230V/50 Hz	† 24-1282-3
4	Fan Blade	24-1622-3
5	Fan Cycling Control	† 20-0127-3
6	High Pressure Cut-out (Refer to COMMON PARTS Page)	Page 4
7	Air Filter (Not shown)	76-2952-3
8	Drier	† 89-3025-9
Miscellaneous – Brackets, Screws, etc.		
9	Fan Shroud	603459-1
10	Fan Motor Mounting Bracket	602743-1
11	Speed Nut to Mount Fan Blade (Not shown)	† 54-7507-9
12	Access Valve	83-7325-3

† Refer to Cross Reference Guide

Q270 REFRIGERATION COMPARTMENT – WATER-COOLED

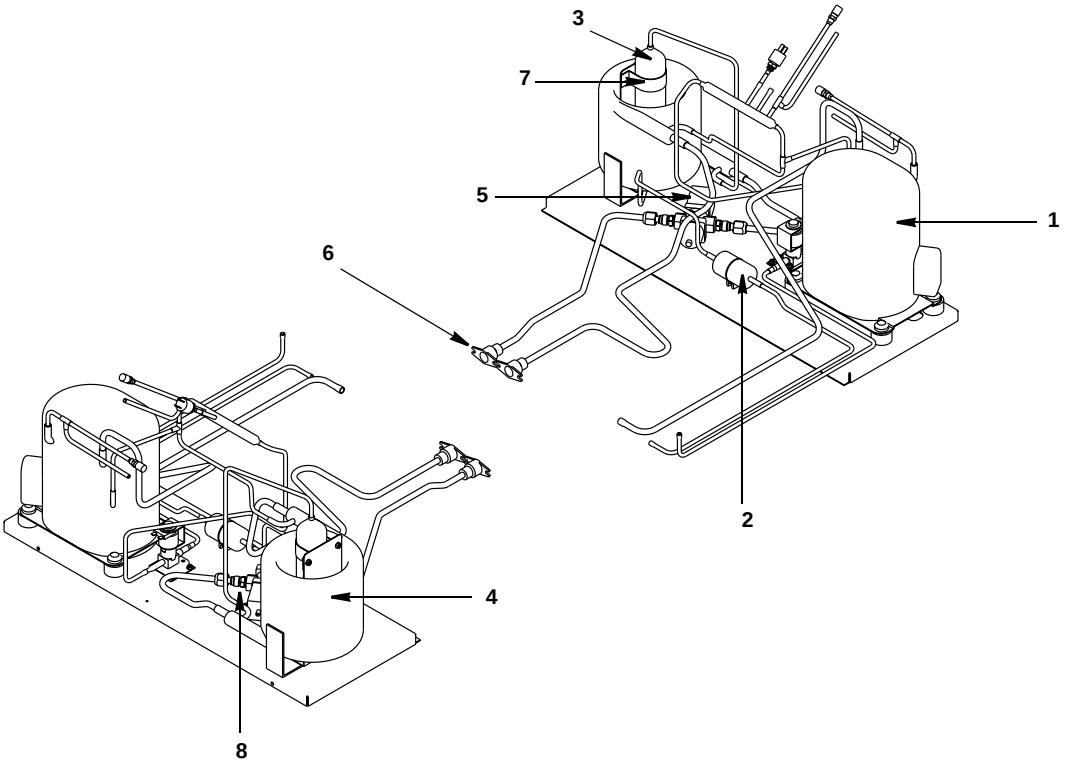

pt1292

DESCRIPTION		PART NO.
1	Compressor (Refer to COMMON PARTS Page)	Page 4
2	Drier	† 89-3025-9
3	Receiver	12-0003-1
4	Water-cooled Condenser	† 88-6531-3
5	Water Regulating Valve	83-7210-3
6	Water Drain Female Wing Adapter	87-0610-3
Miscellaneous – Brackets, Screws, etc.		
7	Receiver Strap	600189-1
8	Water Coupling	83-3202-3

† Refer to Cross Reference Guide

Q270 PANELS

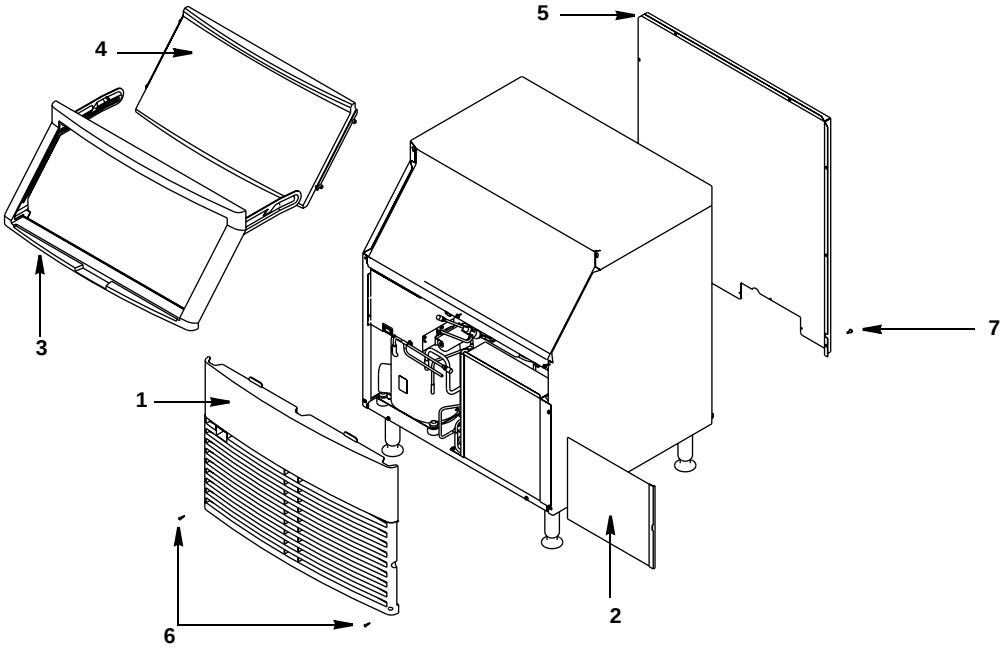

DESCRIPTION		PART NO.
1	Front Panel Assembly	76-2951-3
2	Air Filter	76-2952-3
3	Door Frame Assembly	76-2953-3
4	Bin Door	43-0439-3
5	Back Panel, Upper	603467-1
Miscellaneous – Brackets, Screws, etc.		
6	Front Cover Screw	† 52-0223-9
7	Screw, #10-24 x .50	† 52-0206-9
8	Ice Scoop (Not shown)	† 33-0260-3

† Refer to Cross Reference Guide

INTENTIONALLY LEFT BLANK