BUNN®

ITEM#

PROJECT

DATE

iMIX® Silver Series® Plus Hot & Iced Dispenser with 5 Hoppers

iMIX-5S+ Hot & Iced
Dimensions: 32.8"H x 19.3" W x 24" D
(83.2cm H x 59.5cm W x 61cm D)

Top hinged door inside view

Features

iMIX Silver Series Plus Hot & Iced Dispenser

Sleek, eye-catching powdered beverage dispenser featuring advanced mixing technology delivers exceptional hot drinks

- 3 dispense nozzles for hot drinks and 2 for iced cappuccino with split hot/ iced cappuccino lighted display.
- Capacity: five, 8-pound (3.6 kg) hoppers.
- Large, lighted front graphics for merchandising.
- One 3 gal. (11.35L) and one 2 gal (7.57L) hot water tank, with individually controlled thermostats, adjustable from 50° to 200°F, for optimum drink quality for hot and cold products.
- Cup clearance at 7.25" (18.4 cm) to accommodate popular cup sizes [adjustable to 8.12" (20.6 cm)].
- Variable speed motors allow control of product consistency in mixing chamber (.75 to 6.6 grams of powder per second).
- Key service components easily accessible through front and top.
- Easily removable side panels for complete access to service components.
- High speed, heavy-duty whipper for complete product mixing.
- Front of machine access to tank drain, dump valves, auger and whipper motors and control board for easy service.
- Key lock on the door prevents tampering.
- Contemporary styling for striking visual statement.
- Spring-loaded, all metal auger drive system for easy hopper installation.
- Front of machine set up and calibration.
- Can be set as push and hold or single size portion control.
- Alphanumeric display allows adjustments and service operational testing from front of machine. Also communicates advertising messages, machine status and technical support contact information.
- Top hinged, lift door model available.

For current specification sheets and other information, go to *www.bunn.com*.

Related Products

Easy Clear® EQHP-10
Product No. : 39000.0004

Easy Clear® EQHP-10L
Product No. : 39000.0001

Preventive maintenance kit
Product No. : 32906.0001

Features deluxe whipper chambers:

1. Robust whipper to ensure full flavor yield.
2. Specially designed self cleaning mixing chamber.
3. Exhaust fan to siphon off moisture that can cause powder buildup.
4. Hot water dispense for easy clean-out.
5. Quick disconnecting parts for thorough sanitizing.

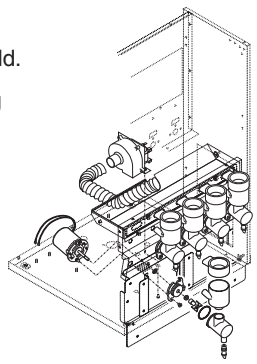

Replacement Displays

Hot
Product No. : 36768.0000

Iced
Product No. : 36768.0005

Hot/Iced
Product No. : 36768.0006

Model	Agency Listing
iMIX-5S+HOT&ICED	NSF, ETL

Dimensions & Specifications

Model	Product #	Volts	Amps	Watts	Capacity	Cubic Measure	Shipping Weight	Cord Attached
iMIX-5S+HOT&ICED	40900.0000	120	15	1800	4.5 gal/hr	16.37 ft^3	135 lbs	Yes*
iMIX-5S+HOT&ICED	40900.0050	120	15	1800	4.5 gal/hr	16.37 ft^3	135 lbs	Yes*
(Top hinged, lift door)								

**Power cord (NEMA 5-15P) 15 Amp-120V machine only. **Special order models available with door hinges on right side.*

Electrical: 120V model requires 2-wires plus ground service rated 120V, single phase, 60 Hz.

Plumbing: 20-100 psi (138-690 kPa) from a 1/4" or larger supply line. A shut-off valve should be installed in the line before the unit. Install a regulator in line when pressure is greater than 90 psi to reduce it to 50 psi. Supplied with 1/4" male flare fitting.

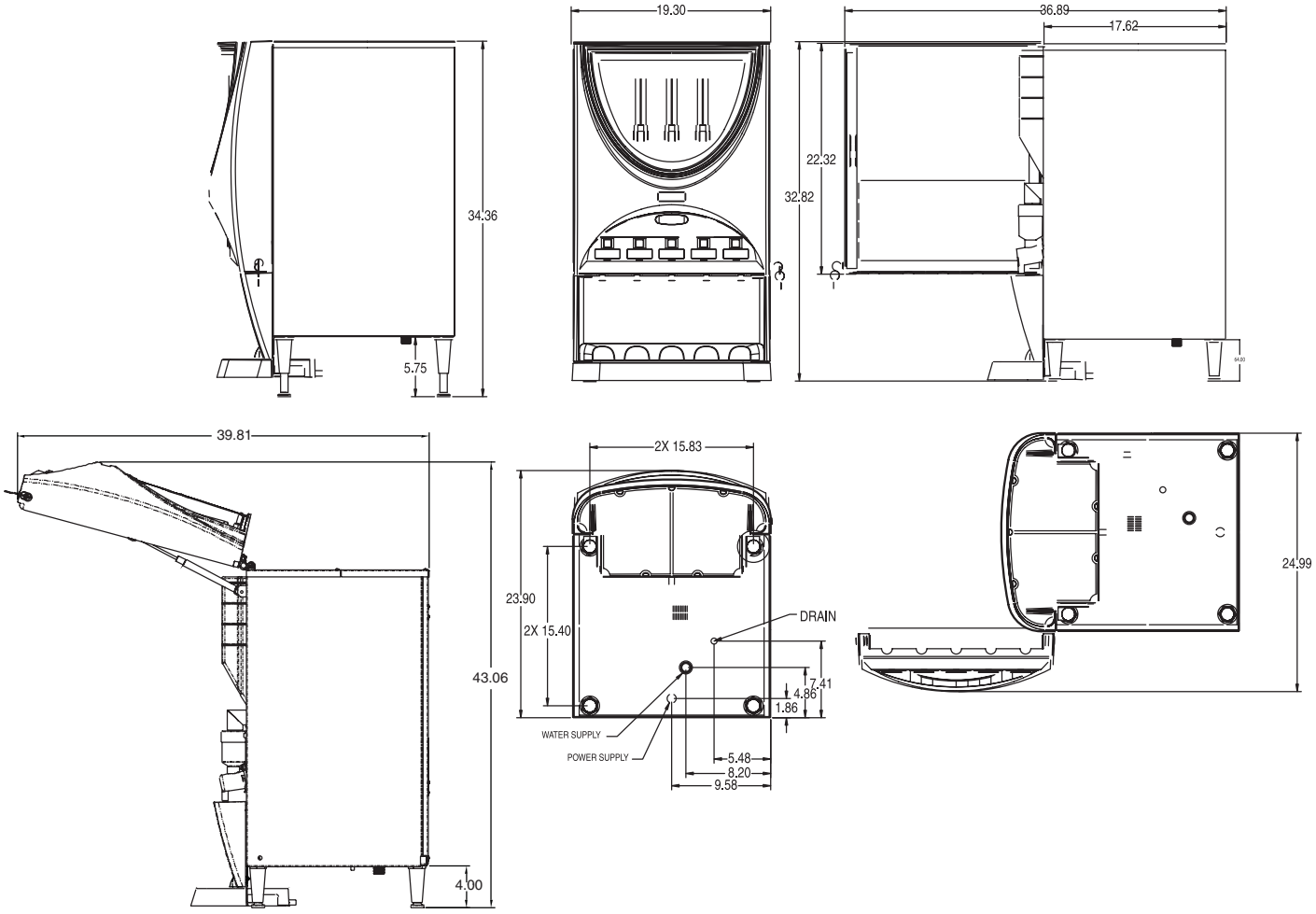

Bunn-O-Matic® Corporation - 1400 Stevenson Drive Springfield, Illinois 62703 • 800-637-8606 • 217-529-6601 • Fax 217-529-6644 • www.bunn.com

BUNN® practices continuous product research and improvement. We reserve the right to change specifications and product design without notice. Such revisions do not entitle the buyer to corresponding changes, improvements, additions or replacements for previously purchased equipment.

All dimensions shown in inches.

5/11 © Bunn-O-Matic Corporation