DESIGNED FOR MEDIUM VOLUME APPLICATIONS

10 Gallons per Hour – 20 Quart Capacity

HIGH CAPACITY WITH 115 VOLT CONVENIENCE!

The **SaniServ** model 708 Frozen Beverage Freezer is an industry workhorse! The 708 provides a great way to offer many types of slush beverage! Choose from frozen margaritas and daiquiri's to frozen fruit flavor drinks, frozen lemonade and smoothies. The 708 also provides a way to serve a greater volume of all of your favorite frozen drinks without the need for an additional costly power supply!

Model 708

Countertop

Frozen Beverage Machine
With *AccuFreeze* Control

SPACE SAVING

Small Footprint Design **-** Save valuable floor space and turn the bar or countertop into a real profit center. By offering the finest quality of frozen drinks each time, every frozen beverage is consistent from the first to the last!

EASY CLEANING AND OPERATION

Fewer Parts = Simplified Cleaning **– SaniServ** equipment is designed and built with the fewer parts to be disassembled, cleaned and sanitized than any other machine in the industry. The state of the art solid-state ***AccuFreeze*** control insures product consistency, worry-free operation and customer satisfaction.

HIGH RETURN ON INVESTMENT

Increased Profits **– SaniServ** machines combine affordable efficiency with consistent product quality and fast quiet operation to insure customer satisfaction with high profit frozen beverages.

QUALITY DESIGN

Durability **– SaniServ** machines are built to achieve long and dependable life through simplicity of design. Every machine is shipped standard with a stainless steel exterior, durable steel interior frame construction, heavy-duty components and consistency systems.

Made in USA

We reserve the right to change specifications and products design without notice. Such revisions do not entitle the buyer to corresponding changes, improvements, additions or replacements for previously purchased equipment

MODEL 708

Counter Model Frozen Beverage/Cocktail Freezer

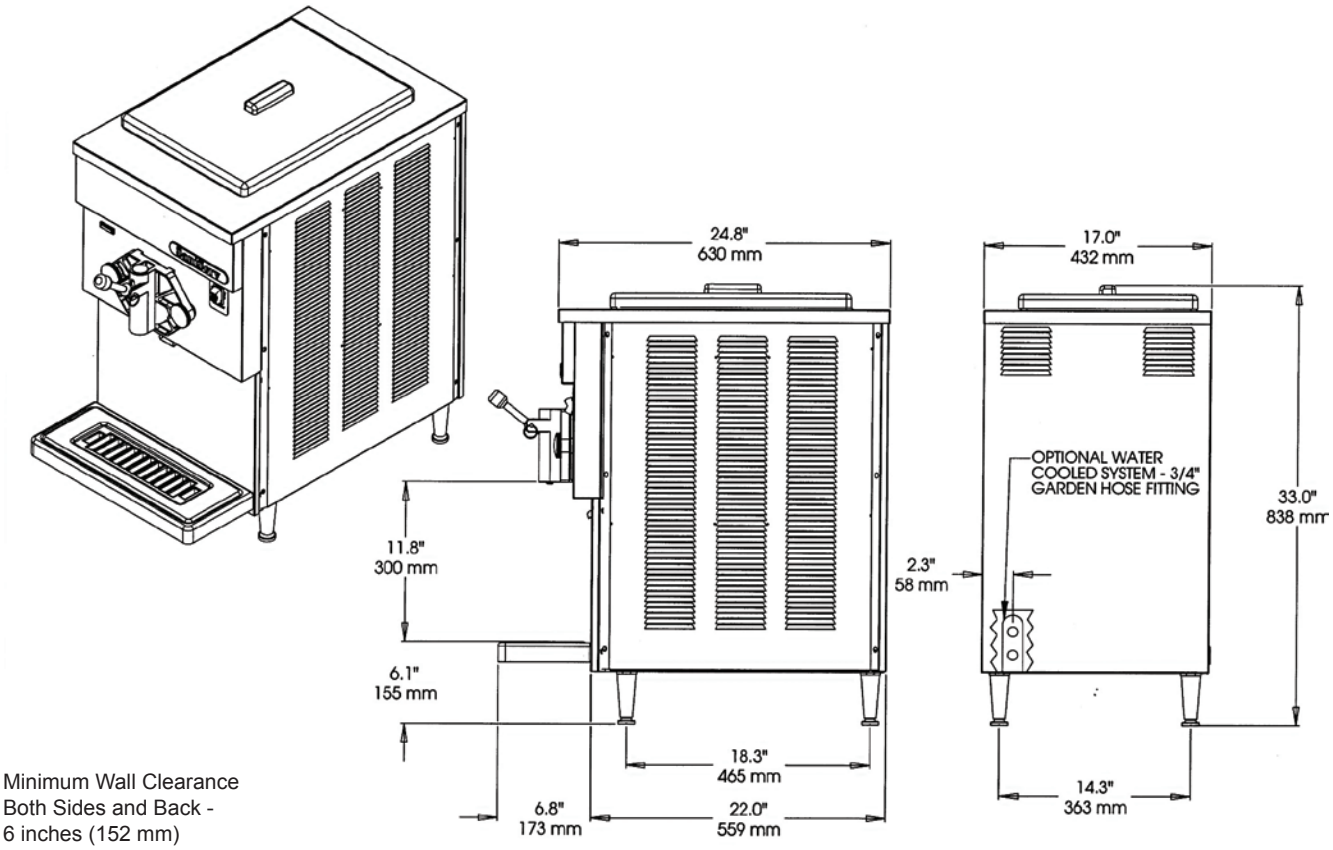

Minimum Wall Clearance
Both Sides and Back -
6 inches (152 mm)

ELECTRICAL				WIDTH	HEIGHT	DEPTH	WEIGHT	VOLUME
VOLTS	Hz	Ph.	Amps	INCHES (MM)	INCHES (MM)	INCHES (MM)	LBS. (Kg)	CU FT. (cu. m.)
115	60	1	15	17 (432)	33 (838)	24.8 (630)	200 (72)	
Shipping Specifications				22.5 (572)	41 (1042)	34.5 (876)	230 (86)	18.5 (.53)

Specifications:

Cooling System:
Air or Water

Dasher and Compressor Motors:
1/4 HP Dasher
3/4 HP Compressor

Refrigerant Type:
R404A

Listings:
UL, NSF

Features:

Evaporator and Mix Reservoir Capacity:
20 Quarts (18.9 liters)

Dasher:
Heavy-Duty Stainless Steel with low friction scraper blades.

Controls:
AccuFreeze solid-state control for accurate product consistency.

Solid State Audio/Visual Mix Out System with Compressor Lockout

Warranty:

Parts	1 year
Compressor	5 years
Evaporator	5 years

Options:

Parts Tray
Drink Spinner
Syrup Rail
Counter Top Mounting Pad Machine Stand
Wash Out Kit – 3/8” Flare Fitting
Water Cooled – 3/4” Garden Hose Fitting
Export Voltage