DESIGNED FOR LOWER VOLUME APPLICATIONS

Two - 4 oz. Servings per Minute - 7 Qt. Capacity

GREAT FOR CAFES, RESTAURANTS, AND PRODUCT SAMPLING

The **SaniServ** model 407 Soft Serv Freezer is perfect for providing small servings, samplers, and adding a-la-mode to favorite desserts. The 407 is an economical addition to any restaurant with its affordable price and space saving countertop solution. The 407 is always a favorite among operators to supply a limited amount of Soft Serv ice cream and frozen yogurt products to keep customers coming back for more treats!

Model 407

Countertop

Soft Serv

Ice Cream / Yogurt Machine

SPACE SAVING

Small Footprint Design **- SaniServ** model 407 saves valuable floor space and turns the countertop into a real profit center by serving high profit ice cream and yogurt products.

EASY CLEANING AND OPERATION

Fewer Parts = Simplified Cleaning **– SaniServ** equipment is designed and built with the fewer parts to be disassembled, cleaned and sanitized than any other machine in the industry.

HIGH RETURN ON INVESTMENT

Increased Profits **– SaniServ** machines combine efficiency with consistent product quality and fast quiet operation while insuring customer satisfaction with high profit ice cream or yogurt products.

QUALITY DESIGN

Durability **– SaniServ** machines are built to achieve long and dependable life through simplicity of design. Every machine is shipped standard with a stainless steel exterior, durable steel interior frame construction, heavy-duty components and consistency systems.

Made in USA

We reserve the right to change specifications and products design without notice. Such revisions do not entitle the buyer to corresponding changes, improvements, additions or replacements for previously purchased equipment

MODEL 407

Counter Model Soft Serv / Yogurt Freezer

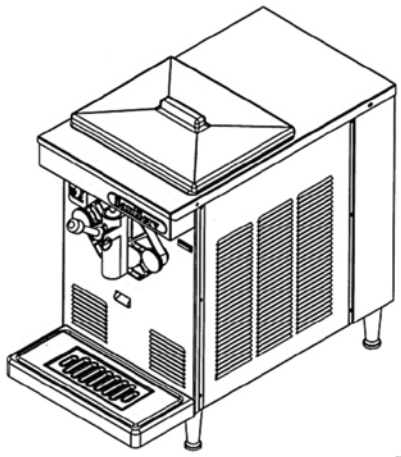

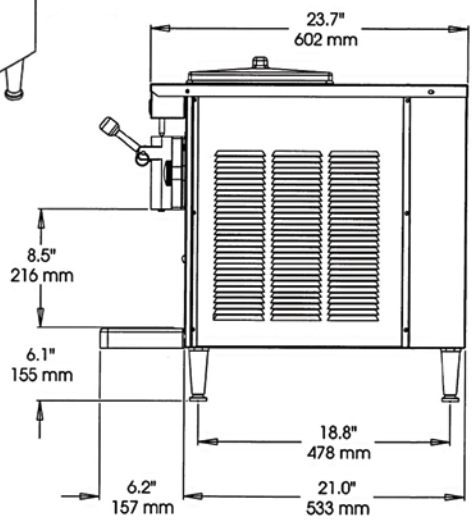

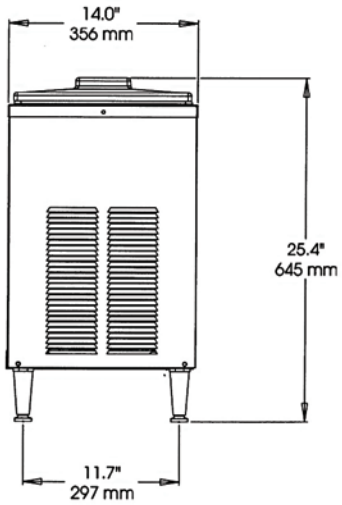

Minimum Wall Clearance
Both Sides and Back -
6 inches (152 mm)

ELECTRICAL				WIDTH	HEIGHT	DEPTH	WEIGHT	VOLUME
VOLTS	Hz	Ph.	Amps	INCHES (MM)	INCHES (MM)	INCHES (MM)	LBS. (Kg)	CU FT. (cu. m.)
115	60	1	15	14 (356)	25.4 (645)	23.7 (602)	145 (66)	
208-230	60	1	10					
220-240	50	1	10					
Shipping Specifications				22.5 (571)	31.5 (800)	34.5 (876)	172 (78)	8.6 (.25)

Specifications:

Cooling System:
Air Only

Dasher and Compressor Motors:
1/2 HP Dasher
1/2 HP Compressor

Refrigerant Type:
R404A

Listings:
UL, cUL, NSF

Features:

Evaporator and Mix Reservoir Capacity:
7 Quarts (9.5 liters)

Dasher:
Heavy-Duty Stainless Steel with low friction scraper blades.

Controls:
Automatically consistency controls for improved consistency.

Tamper Proof Automatic Visual Mix Out System

Warranty:

Parts	1 year
Compressor	5 years
Evaporator	5 years

Options:

Tune Up Kit
Machine Stand
Export Voltages