DESIGNED FOR LOW-MEDIUM VOLUME APPLICATIONS

Four – 4 oz. Servings per Minute – 20 Qt. Capacity

GREAT FOR SMALLER RESTAURANTS AND KITCHENS

The **SaniServ** model 408 Soft Serv Freezer allows business owners to affordably provide high profit Soft Serv and frozen yogurt products with the convenience of 115-volt electrical access. The 408 can handle producing product for all day operations and is a favorite among owners in satisfying customer demand for great frozen treats any time; any place!

Model 408

Countertop

Soft Serv

Ice Cream / Yogurt Machine

SPACE SAVING

Small Footprint Design **- SaniServ** model 408 with its compact design and production versatility saves valuable floor space and turns the countertop into a real profit center by adding and serving high profit ice cream and yogurt products.

EASY CLEANING AND OPERATION

Fewer Parts = Simplified Cleaning **– SaniServ** equipment is designed and built with the fewer parts to be disassembled, cleaned and sanitized than any other machine in the industry.

HIGH RETURN ON INVESTMENT

Increased Profits **– SaniServ** machines combine efficiency with consistent product quality and fast quiet operation while insuring customer satisfaction with high profit ice cream or yogurt products.

QUALITY DESIGN

Durability **– SaniServ** machines are built to achieve long and dependable life through simplicity of design. Every machine is shipped standard with a stainless steel exterior, durable steel interior frame construction, heavy-duty components and consistency systems.

Made in USA

We reserve the right to change specifications and products design without notice. Such revisions do not entitle the buyer to corresponding changes, improvements, additions or replacements for previously purchased equipment

MODEL 408

Counter Model Soft Serv / Yogurt Freezer

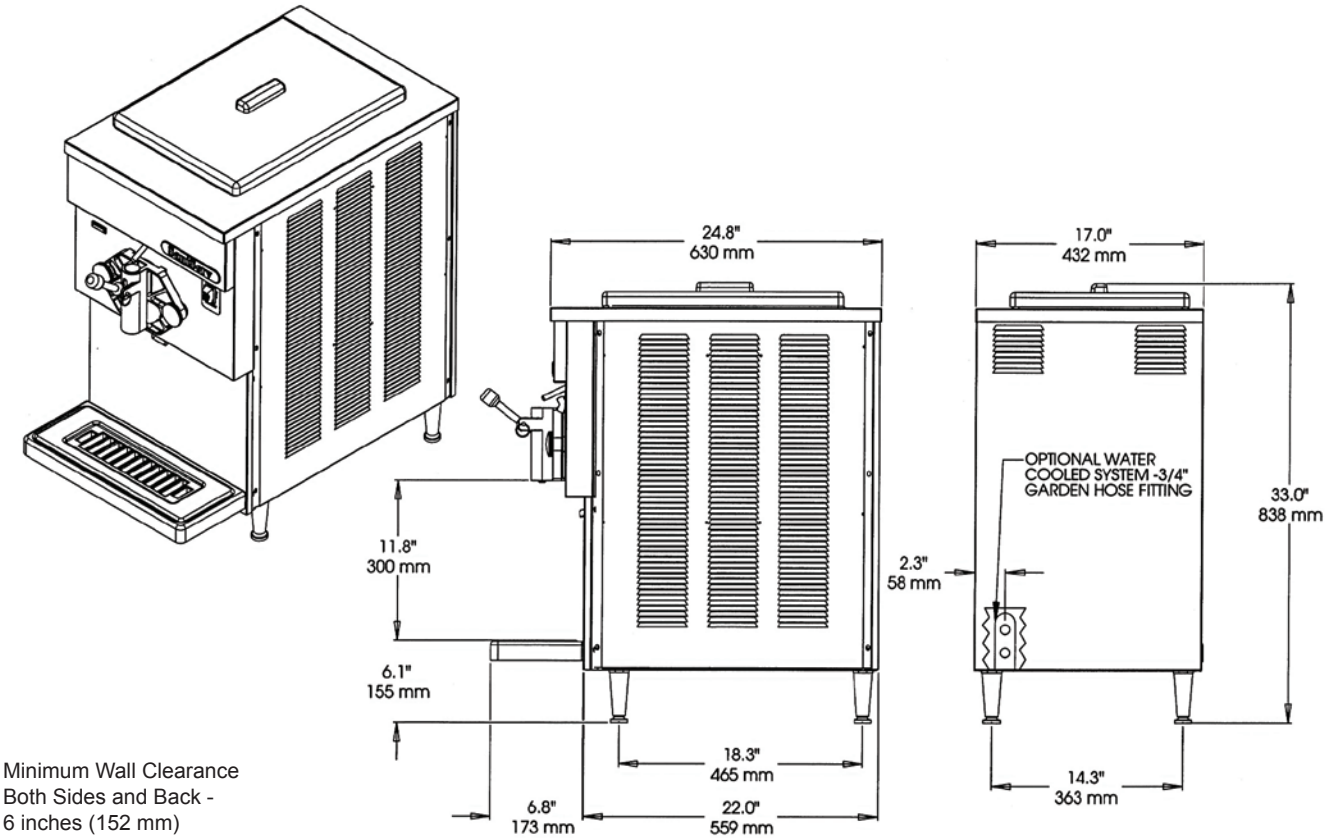

Minimum Wall Clearance
Both Sides and Back -
6 inches (152 mm)

ELECTRICAL				WIDTH	HEIGHT	DEPTH	WEIGHT	VOLUME
VOLTS	Hz	Ph.	Amps	INCHES (MM)	INCHES (MM)	INCHES (MM)	LBS. (Kg)	CU FT. (cu. m.)
115	60	1	30	17 (432)	33.0 (838)	24.8 (630)	230 (105)	
Shipping Specifications				22.5 (572)	41 (1042)	34.5 (876)	260 (118)	18.5 (.53)

Specifications:

Cooling System:
Air or Water

Dasher and Compressor Motors:
1 HP Dasher
3/4 HP Compressor

Refrigerant Type:
R404A

Listings:
UL, cUL, NSF

Features:

Evaporator and Mix Reservoir Capacity:
20 Quarts (18.9 liters)

Dasher:
Heavy-Duty Stainless Steel with low friction scraper blades.

Controls:
Automatically consistency controls for improved consistency.

Tamper Proof Automatic Visual Mix Out System

Warranty:

Parts	1 year
Compressor	5 years
Evaporator	5 years

Options:

Tune Up Kit
Parts Tray
Syrup Rail
Counter Top Mounting Pad Machine Stand
Water Cooled - 3/4” Garden Hose Fitting
Wash Out Kit - 3/8” Flare Fitting