DESIGNED FOR MEDIUM VOLUME APPLICATIONS

Five – 4 oz. Servings per Minute – 20 Qt. Capacity

GREAT FOR RESTAURANTS AND CONCESSIONAIRES

The **SaniServ** model 401 Soft Serv Freezer provides high profit, consistent quality Soft Serv and yogurt products anytime anywhere! Fewer parts to clean and sanitize means rapid disassembly and assembly and the ease of operation makes the 401 a favorite among owners and operators. The increased production, capacity and recovery time make the 401 a perfect piece of equipment for satisfying customer demand and providing the frozen treats they want!

Model 401

Countertop

Soft Serv

Ice Cream / Yogurt Machine

With *AccuFreeze* Control

SPACE SAVING

Small Footprint Design **- SaniServ** model 401 saves valuable floor space and turns the countertop into a real profit center by serving high profit ice cream and yogurt products.

EASY CLEANING AND OPERATION

Fewer Parts = Simplified Cleaning **– SaniServ** equipment is designed and built with the fewer parts to be disassembled, cleaned and sanitized than any other machine in the industry. The state of the art solid-state ***AccuFreeze*** control insures product consistency, worry-free operation and customer satisfaction.

HIGH RETURN ON INVESTMENT

Increased Profits **– SaniServ** machines combine efficiency with consistent product quality and fast quiet operation while insuring customer satisfaction with high profit ice cream or yogurt products.

Made in USA

QUALITY DESIGN

Durability **– SaniServ** machines are built to achieve long and dependable life through simplicity of design. Every machine is shipped standard with a stainless steel exterior, durable steel interior frame construction, heavy-duty components and consistency systems.

We reserve the right to change specifications and products design without notice. Such revisions do not entitle the buyer to corresponding changes, improvements, additions or replacements for previously purchased equipment

MODEL 401

Counter Model Soft Serv / Yogurt Freezer

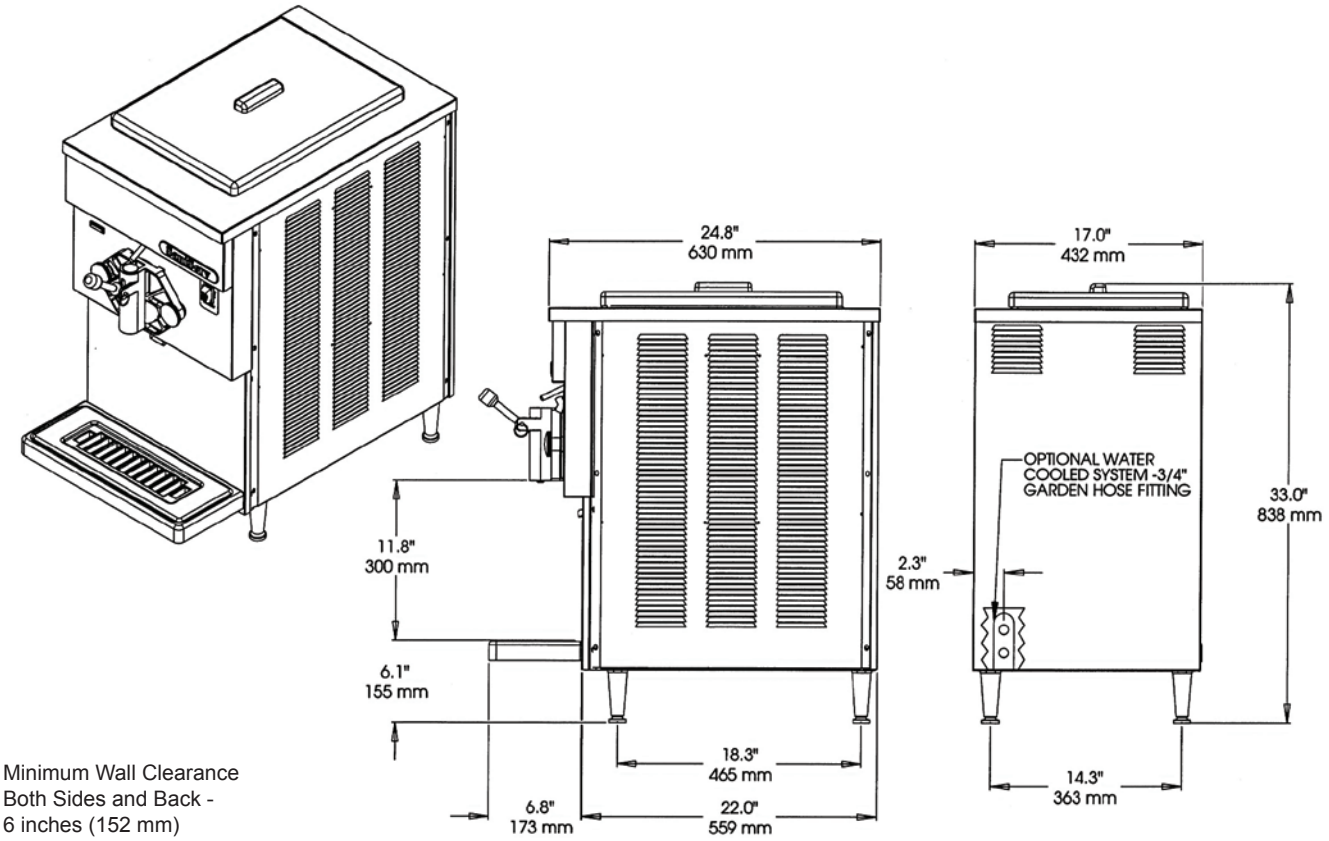

Minimum Wall Clearance
Both Sides and Back -
6 inches (152 mm)

ELECTRICAL				WIDTH	HEIGHT	DEPTH	WEIGHT	VOLUME
VOLTS	Hz	Ph.	Amps	INCHES (MM)	INCHES (MM)	INCHES (MM)	LBS. (Kg)	CU FT. (cu. m.)
208-230	60	1	20	17 (432)	33.0 (838)	24.8 (630)	242 (110)	
208-230	60	3	15					
Shipping Specifications				22.5 (572)	41 (1042)	34.5 (876)	272 (124)	18.5 (.53)

Specifications:

Cooling System:
Air or Water

Dasher and Compressor Motors:
1 HP Dasher
1 HP Compressor

Refrigerant Type:
R404A

Listings:
UL, cUL, NSF

Features:

Evaporator and Mix Reservoir Capacity:
20 Quarts (18.9 liters)

Dasher:
Heavy-Duty Stainless Steel with low friction scraper blades.

Controls:
AccuFreeze solid-state control for accurate product consistency.

Solid State Audio/Visual Mix Out System with Compressor Lockout

Warranty:

Parts	1 year
Compressor	5 years
Evaporator	5 years

Options:

Tune Up Kit
Parts Tray
Syrup Rail
Counter Top Mounting Pad Machine Stand
Water Cooled - 3/4” Garden Hose Fitting
Wash Out Kit - 3/8” Flare Fitting