DESIGNED FOR HIGHER VOLUME APPLICATIONS

Seven – 4 oz. Servings per Minute per side and 20 Qt. Capacity per side

GREAT FOR RESTAURANTS, BUFFETS, & ICE CREAM SHOPS

The **SaniServ** model 424 Twin Flavor Soft Serv Freezer can provide not one but two favorite high profit, consistent quality Soft Serv and yogurt products in a dual barrel design! The ease of the model 424's operation and product versatility is a favorite among owners and operators. The high production, capacity and recovery time insures the 424 is a perfect piece of equipment for satisfying enough of any two customer favorite frozen treats at any time!

Model 424

Floor Model

***Twin* Soft Serv**
Ice Cream / Yogurt Machine
With *AccuFreeze* Control

HEAVY DUTY

***Traditional Floor Model Design* - SaniServ** model 424 provides a high volume of two flavors of Soft Serv and frozen yogurt products in the traditional floor model design. Operators can turn that valuable floor space into a high profit center by providing two frozen favorite treats customers enjoy!

EASY CLEANING AND OPERATION

Fewer Parts = Simplified Cleaning* – SaniServ** equipment is designed and built with the fewer parts to be disassembled, cleaned and sanitized than any other machine in the industry. The state of the art solid-state ***AccuFreeze control insures product consistency, worry free operation and customer satisfaction.

HIGH RETURN ON INVESTMENT

***Increased Profits* – SaniServ** machines combine efficiency with consistent product quality and fast quiet operation while insuring customer satisfaction with high profit ice cream or yogurt products.

QUALITY DESIGN

***Durability* – SaniServ** machines are built to achieve long and dependable life through simplicity of design. Every machine is shipped standard with a stainless steel exterior, durable steel interior frame construction, heavy-duty components and consistency systems.

Made in USA

We reserve the right to change specifications and products design without notice. Such revisions do not entitle the buyer to corresponding changes, improvements, additions or replacements for previously purchased equipment

MODEL 424

Floor Model *Twin* Soft Serv / Yogurt Freezer

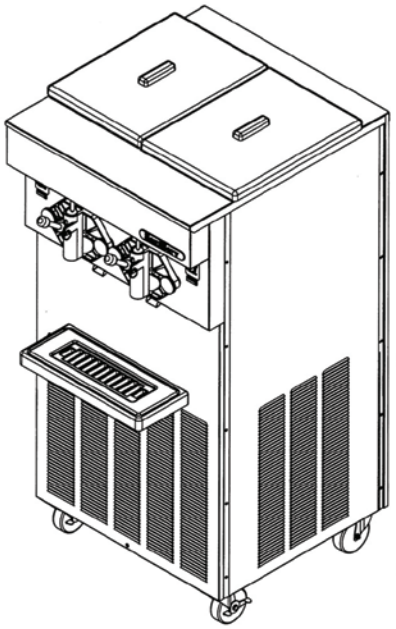

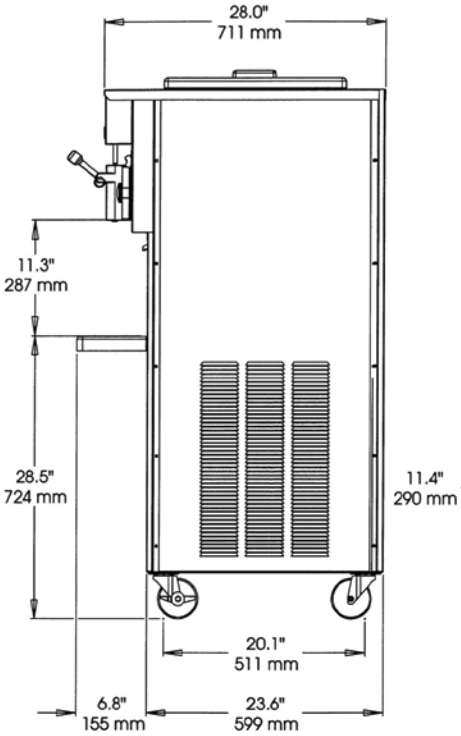

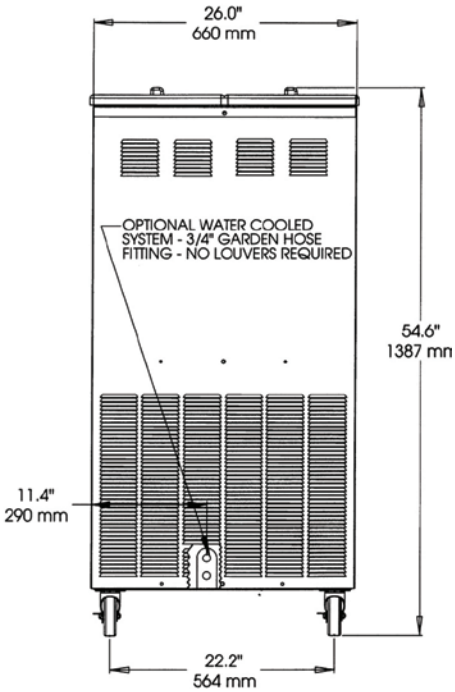

Minimum Wall Clearance
Both Sides and Back -
6 inches (152 mm)

ELECTRICAL				WIDTH	HEIGHT	DEPTH	WEIGHT	VOLUME
VOLTS	Hz	Ph.	Amps	INCHES (MM)	INCHES (MM)	INCHES (MM)	LBS. (Kg)	CU FT. (cu. m.)
208-230	60	1	2x30*	26 (660)	54.6 (1387)	28 (711)	575 (261)	
208-230	60	3	2x20*					
Shipping Specifications				37 (940)	60 (1524)	41 (1024)	615 (279)	52.7 (1.49)

* 2 circuits required

Specifications:

Cooling System:
Air or Water

Dasher and Compressor Motors:
(2) 1 HP Dasher
(2) 2 HP Compressor

Refrigerant Type:
R404A

Features:

Evaporator and Mix Reservoir Capacity:
20 Quarts (18.9 liters)

Dasher:
Heavy-Duty Stainless Steel with low friction scraper blades.

Controls:
AccuFreeze solid-state control for accurate product consistency.

Solid State Audio/Visual Mix Out System with Compressor Lockout

Warranty:

Parts	1 year
Compressor	5 years
Evaporator	5 years

Options:

Tune Up Kit
Parts Tray
Syrup Rail
Water Cooled - 3/4” Garden Hose Fitting
Wash Out Kit - 3/8” Flare Fitting
Export Voltages