DESIGNED FOR HIGH VOLUME APPLICATIONS

Seven – 4 oz. Servings per Minute - 7 Quart Capacity

INCREASE YOUR PROFITS

Combine efficiency with consistent, high overrun, high quality product and fast, quiet operation to insure customer satisfaction with high profit ice cream products.

DIAL IN YOUR OVERRUN

You can set the percentage of overrun to maximize your yield, taste, mouth appeal and profit. The 914 delivers the same overrun from the start of the day till the end.

FAST SERVICE

Just pull the spigot handle to dispense the product. The pressurized 914 delivers product at a fast even pace.

HIGH VOLUME OF PRODUCT

Up to seven 4 oz. servings per minute. Fast recovery insures availability of product for high volume operations, even during peak periods. Ideal for Quick Serve Restaurants, Full Service Operations, C-stores, Concessionaires, and Stadiums.

REFRIGERATED CABINET

Is designed to hold 8 gallons of fresh soft serve mix in the integral cabinet and to maintain the product in the reservoir at a uniform temperature that exceeds even the most stringent standards.

STATE OF THE ART MIX DELIVERY SYSTEM

The unique peristaltic pump and air mix delivery system are front mounted for easy access, cleaning and adjustments.

STATE OF THE ART MIX OUT SYSTEM

Tamper proof system alerts the operator when product in the reservoir is low and needs to be replenished.

FAST, EASY CLEANING

SaniServ equipment is design to be easily cleaned and sanitized, with the fewest parts possible for rapid assembly and disassembly.

INVEST IN EQUIPMENT BUILT TO LAST

SaniServ Soft Serve machines achieve long and dependable life through simplicity of design, durable steel frame construction, heavy duty components and torque system. Shipped standard with stainless steel exterior.

Model 914

Floor Model

Pressurized, Refrigerated Cabinet

Soft Serve Ice Cream Machine

Made in USA

We reserve the right to change specifications and products design without notice. Such revisions do not entitle the buyer to corresponding changes, improvements, additions or replacements for previously purchased equipment

MODEL 914

Floor Model High Production Pressurized Soft Serve Ice Cream Machine

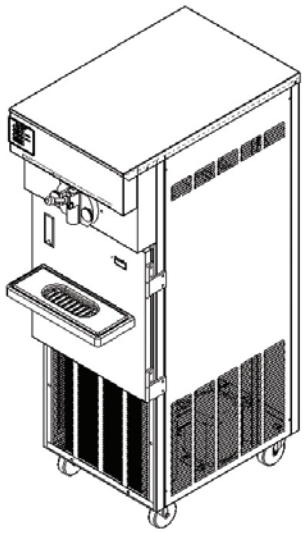

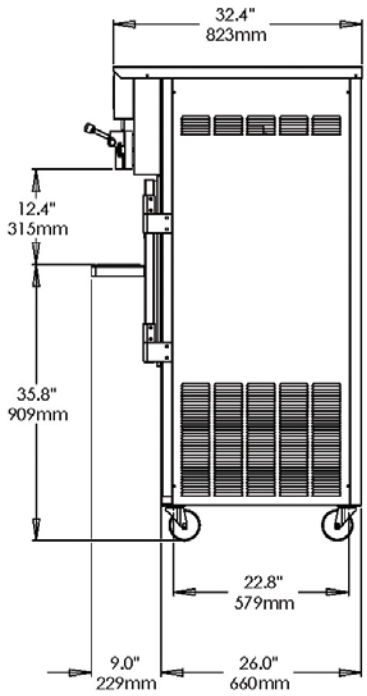

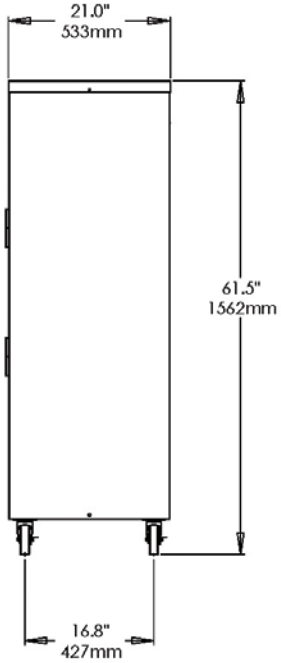

Minimum Wall Clearance
Both Sides and Back -
6 inches (152 mm)

ELECTRICAL				WIDTH	HEIGHT	DEPTH	WEIGHT	VOLUME
VOLTS	Hz	Ph.	Amps	INCHES (MM)	INCHES (MM)	INCHES (MM)	LBS. (Kg)	CU FT. (cu. m.)
208-230	60	1	35	21(534)	61.5(1562)	32.4(823)	512(1130)	
208-230	60	3	25	21(534)	61.5(1562)	32.4(823)	512(1130)	
Shipping Specifications				36(914)	65(2650)	40(1016)	540(1192)	54.8(1.53)

Specifications:

Cooling System:
Air or Water cooled condensers

Dasher and Compressor Motors:
1 HP Dasher

2 HP - Freezing Cylinder
1/5 HP - Refrigerated Cabinet
Compressors

Refrigerant Type:
R404A - Freezing cylinder
R134A - Refrigerated Cabinet

Listings:
UL, cUL, NSF

Features:

Evaporator Capacity:
3.1 Quarts (4.2 liters)

Dasher:
Heavy-Duty Stainless Steel with low friction scraper blades.

Controls:
AccuFreeze with touch pad controls for freezing cylinder, refrigerated cabinet and pump.

Audio/Visual Mix Out System and pump alarm.

Warranty:

Parts	1 year
Compressor	5 years
Evaporator	5 years

Options:

Tune Up Kit
Export Voltage