DESIGNED FOR MEDIUM VOLUME APPLICATIONS

10 Gallons per Hour – 25 Quart Capacity

HIGH FROZEN PRODUCT VISIBILITY MEANS HIGH PROFITS!

The **SaniServ** model 108HP Frozen Beverage Freezer provides owners and operators everything they are asking for: Frozen beverage visibility merchandising in a consistent and reliable machine! The extra large 8 inch face plate design allows customers to view colorful frozen beverages being offered without the condensation and unreliable operation of traditional "bubble top" machines! The high frozen product visibility, along with increased production and reliability, results in increased sales and high profits!

Model 108HP

Countertop

Frozen Beverage Machine

SPACE SAVING

Small Footprint Design **- SaniServ** model 108HP offers frozen product visibility in reliable space saving equipment and design! Owners and Operators can turn the countertop into a highly colorful profit center by providing the frozen beverages customers enjoy!

EASY CLEANING AND OPERATION

Fewer Parts = Simplified Cleaning **– SaniServ** equipment is designed and built with the fewer parts to be disassembled, cleaned and sanitized than any other machine in the industry.

HIGH RETURN ON INVESTMENT

Increased Profits **– SaniServ** machines combine affordable efficiency with consistent product quality and fast quiet operation to insure customer satisfaction with high profit frozen beverages.

QUALITY DESIGN

Durability **– SaniServ** machines are built to achieve long and dependable life through simplicity of design. Every machine is shipped standard with a stainless steel exterior, durable steel interior frame construction, heavy-duty components and consistency systems.

Made in USA

We reserve the right to change specifications and products design without notice. Such revisions do not entitle the buyer to corresponding changes, improvements, additions or replacements for previously purchased equipment

MODEL 108HP

Counter Model Frozen Beverage/Cocktail Freezer

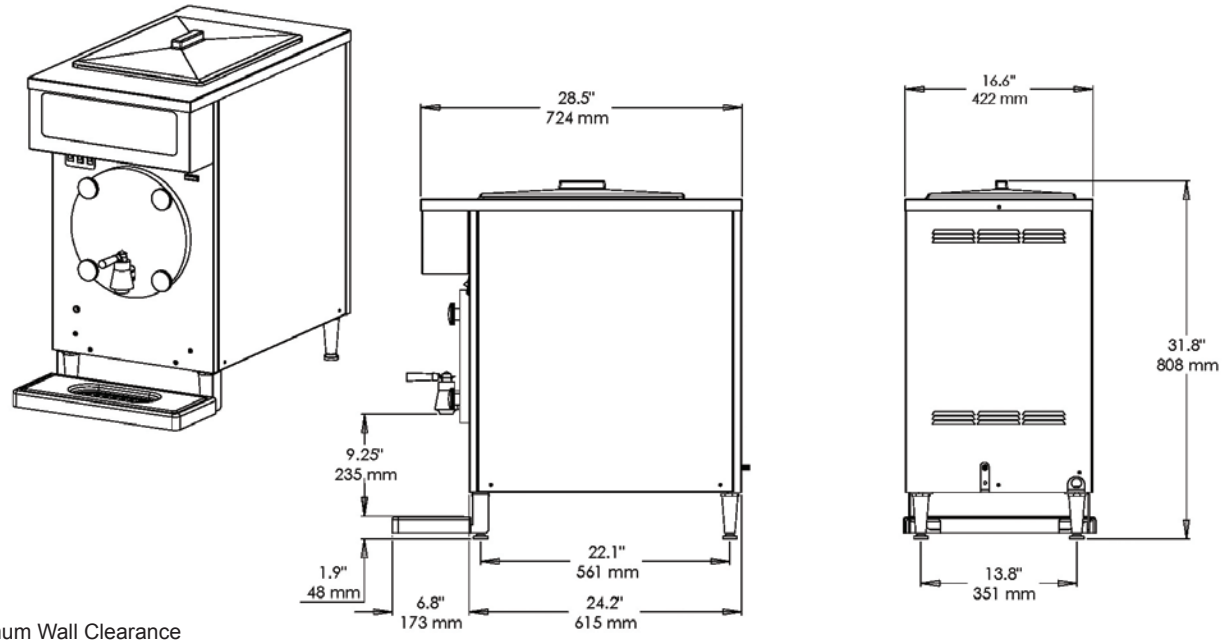

Minimum Wall Clearance
Both Sides and Back -
6 inches (152 mm)

ELECTRICAL				WIDTH	HEIGHT	DEPTH	WEIGHT	VOLUME
VOLTS	Hz	Ph.	Amps	INCHES (MM)	INCHES (MM)	INCHES (MM)	LBS. (Kg)	CU FT. (cu. m.)
208-230	60	1	25	16.6 (422)	37.1 (942)	28.5 (724)	210 (95)	
208-230	60	3	20					
Shipping Specifications				22.5 (572)	41 (1042)	34.5 (876)	250 (114)	18.5 (.53)

Specifications:

Cooling System:
Water

Dasher and Compressor Motors:
1/2 HP Dasher
1 HP Compressor

Refrigerant Type:
R404A

Listings:
UL, cUL, NSF

Features:

Evaporator and Mix Reservoir Capacity:
25 Quarts (23.6 liters)

Dasher:
Heavy-Duty Stainless Steel with low friction scraper blades.

Controls:
Automatic consistency controls for improved product consistency.

Solid State Audio/Visual Mix Out System

Warranty:

Parts	1 year
Compressor	5 years
Evaporator	5 years

Options:

Tune Up Kit
Parts Tray
Drink Spinner
Counter Top Mounting Pad
Machine Stand
Wash Out Kit - 3/8” Flare Fitting
Water Cooled - 3/4” Garden Hose Fitting
Export Voltage