Glastender®

A family company manufacturing in the USA

Project: _____	AIA#
Item #: _____ Qty: _____	SIS#
Model #: _____	

GW24 Rotary Glasswasher

24" wide by 24" deep Rotary Glasswasher

GW24
Shown with sliding door closed

Standard Features

- Fill and dump style cycle uses less water and energy than traditional rotary glasswashers.
- Unit plugs into standard 120V electrical outlet for an easy installation.
- Computer controlled fill cycle allows for 75°F (24°C) rinse, providing clean glasses that are cool to the touch.
- The sliding cover and cold water rinse prevent steam from escaping during and after the cycle.
- Unique drainboard top provides integrated glassware landing area.
- Exclusive design with side notch provides space for three one-gallon chemical containers within the 24" by 24" foot print.
- Conveyor advance switch rotates conveyor one-half turn for easy loading and unloading of glassware.
- Covers and drainboard top are easily removable for cleaning access.
- Pre-programmed de-liming cycle for easy removal of mineral deposits during maintenance (de-liming agent must be added).
- Conveyor and stationary spray box are easily removed for cleaning and visual inspection.
- Automatic peristaltic metering pumps accurately dispense detergent, sanitizer, and rinse aid.

Specifications

General Plumbing [Hot water and cold water required]
- Plumb with 1/2" water supply. Adapt to 3/8" FMPT.
- Minimum water pressure is 25 PSI
- Maximum water pressure is 100 PSI. Install water pressure regulator if line pressure is over 100 PSI. Water valve on unit has built-in strainer and flow control to provide consistent volume between 25 and 100 PSI
- Install separate water shut-off valve
- Unit has built-in air gap - vacuum breaker is not required
- Consumption is 3 gallons per cycle

Hot Water Supply
- Maximum temperature is 150ºF (66ºC)
- Minimum temperature is 130ºF (54ºC)

Cold Water Supply
- No minimum temperature requirement

Drain
- 1-1/2" tailpiece.
- Use open type floor drain for maximum drainage

Electrical
- 120V, single phase, 60Hz, 6-foot grounded cord included
- Dedicated 15 amp circuit recommended
- Power requirements - 3.5 amps

*Detergent**
- Extra heavy duty, non-foaming, commercial liquid dishwashing detergent is required - .30% concentration
- Consult local chemical supplier to match detergent with local water conditions

*Sanitizer**
- Liquid chlorine bleach (sodium hypochlorite - 5.25% solution) adjusted to 50 ppm

*Rinse Aid**
- Liquid Rinse Aid adjusted for proper sheeting

Operation / Capacity
- 120°F (49ºC) minimum wash temp and rinse temp adjustable down to 75°F (24ºC)
- 2 minute 15 second cycle
- 2-3/4" diameter bar glasses - 41 per cycle
- 2-1/2" diameter bar glasses - 49 per cycle
- Maximum glass height 10"

Materials
- 20 gauge stainless steel parts include: cabinet
- 18 gauge stainless steel parts include: floor and tanks
- 16 gauge stainless steel parts include: leg mounting brackets and legs
- 11 gauge stainless steel parts include: drive wheel

Service Access
- Front panel must remain accessible for service

* Detergent, Sanitizer, and Rinse Aid containers are stored externally. The side cut-out in the machine provides space for three one-gallon chemical containers within the 24" by 24" foot print of the machine.

Glastender, Inc. • 5400 North Michigan Road • Saginaw, MI • 48604-9780
989.752.4275 • 800.748.0423 • Fax 989.752.4444
www.glastender.com

Approval/Notes:

Specifications subject to change without notice. For current specifications please visit our website.

GW24 Rotary Glasswasher

Accessories

Part No.	Description
01001500	Slide-out chemical bottle rack
01001525	Low level detection, sanitizer
01001526	Low level detection, sani & detergent
01001527	Low level detect, sani, det, & rinse aid
01001541	Export transformer 220V/50Hz electrical -NOTE: Eliminates side notch

Dimensional Information

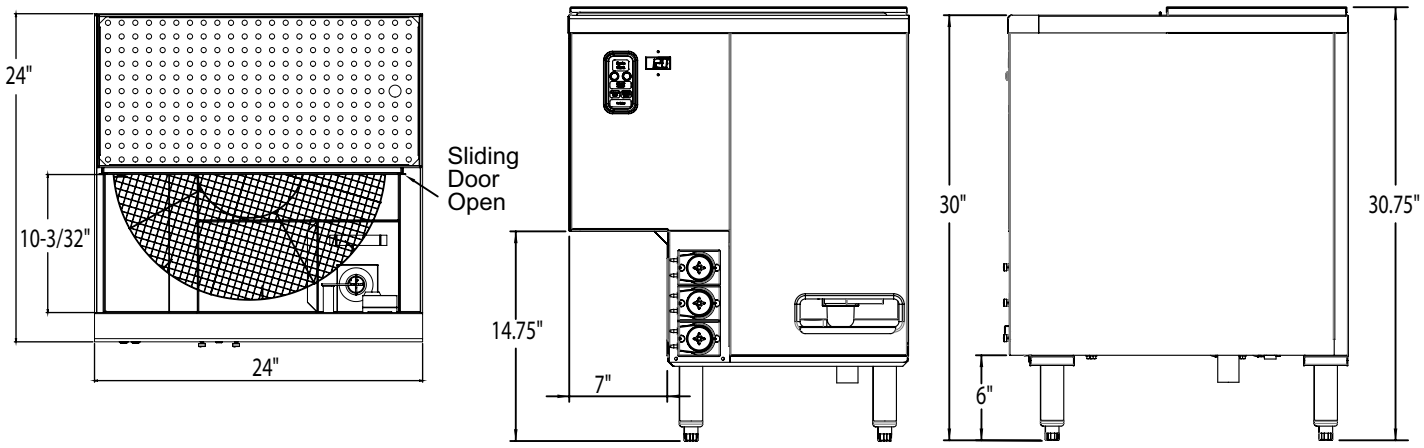

PLAN VIEW FRONT VIEW SIDE VIEW

Mechanicals

Note: 1. In all cases, consult local plumbing, electrical and health codes for regulations which may not be consistent with the information on the front of this specification sheet

2. The utility connections are made from the floor at the bottom of the unit approximately 7" to 8" high.

3. The Glastender policy of constant quality improvement means specifications are subject to change without notice.

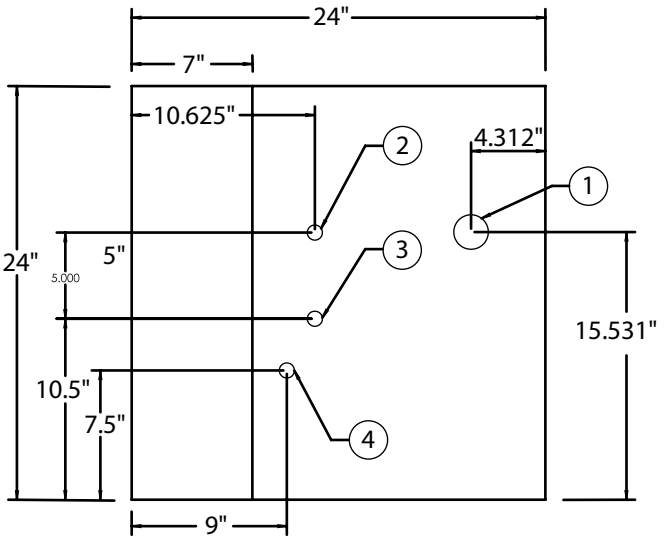

① = DRAIN
② = HOT WATER
③ = COLD WATER
④ = ELECTRICAL

Glastender®
5400 North Michigan Road • Saginaw, MI • 48604-9780
989.752.4275 • 800.748.0423 • Fax 989.752.4444
www.glastender.com

Printed in USA