Project:	AIA#
Item #: _____ Qty: _____	SIS#
Model #:	

24" Rotary Glasswasher

GT-24-CW-208, GT-24-CW-240,
GT-24-CCW-208, GT-24-CCW-240

GT-24-CW

Standard Features

- Removable top and front shield for easy cleaning access
- Available with clockwise or counterclockwise rotation.
- Conveyor lifts out for easy cleaning.
- Set of three separate curtains is included
- Switch panel may be relocated in the field
- Removable side panels for easy service access
- Spray boxes unlatch for easy cleaning - engineered for maximum soil removal
- 4000 watt heater encased in an incoloy sheath to resist caustic detergents
- Digital temperature gauges built into switch panel
- Thermostat controls wash tank temperature
- Automatic electronic peristaltic metering pumps
- 1/6 HP pumps recirculate wash water and rinse water
- Fractional HP drive motor powers the belt driven conveyor and includes built-in slip clutch
- Sensor activated low water cutoff in wash tank protects heater
- Automatic chemical sensor alerts operator when detergent and sanitizer is low
- Prime switches provided for high speed chemical priming

Specifications

General Plumbing [Hot water and cold water required]
- Plumb with 1/2" water supply. Adapt to 3/8" FMPT.
- Minimum water pressure is 25 PSI
- Maximum water pressure is 100 PSI. Install water pressure regulator if line pressure is over 100 PSI. Water valve on unit has built-in strainer and flow control to provide consistent volume between 25 and 100 PSI
- Install separate water shut-off valve for each connection
- Unit has built-in air gaps. Vacuum breakers are not required

Hot Water Only
- Maximum temperature is 150°F (66°C), minimum is 130°F (54°C).
- Initial fill is 3 gallons. Maximum consumption is 1/4 gallon per minute during operation

Cold Water Only
- Minimum temperature is 75°F (24°C) per FDA Code. Install hot/cold mixing valve if necessary.
- Initial fill is 2-1/4 gallons, maximum consumption is 2 gallons per minute during operation

Drain
- 1-1/2" tailpiece.
- Use open type floor drain for maximum drainage
- Two white plastic drain cocks extending below the bottom are for recirculating pump drainage when required for replacement or winterizing. The drain cocks are in the closed position - no plumbing is required.

Electrical
- 120/208-240V, single phase, 60Hz, 3-wire (two hot and one neutral), ground connected per local code (green wire), 20 amp for 240 volt or 30 amp for 208 volt (4 wire total), unit will operate within 10% of rated voltage
- Dedicated 20 amp circuit required [30 amp for 208V]
- A power relay in the unit separates the high and low voltages and directs the respective power to the electrical components. The heater and power light operate on 208 or 240 volts - all other components operate on 120 volts.

Detergent
- Extra heavy duty, non-foaming, commercial liquid dishwashing detergent is required - .30% concentration
- Consult local chemical supplier to match detergent with local water conditions

Sanitizer
- Liquid chlorine bleach (sodium hypochlorite - 5.25% solution) adjusted to 50 ppm or iodophor adjusted to 12.5 ppm

Capacity
- 3 minute cycle, 60 second wash and 60 second rinse exposure
- 13 glasses† per minute or 800 per hour (maximum glass height 11" - including pitchers and wine carafes)

Materials
- 20 and 22 gauge stainless steel parts include: cabinet
- 18 gauge stainless steel parts include: floor and tanks
- 16 gauge stainless steel parts include: leg mounting brackets and legs
- Conveyor is electropolished, welded stainless steel wire

† Based on 2-3/4″ diameter bar glasses

Glastender, Inc. • 5400 North Michigan Road • Saginaw, MI • 48604-9780
989.752.4275 • 800.748.0423 • Fax 989.752.4444
www.glastender.com

Approval/Notes:

Specifications subject to change without notice. For current specifications please visit our website.

GT-24 Glasswasher

Dimensional Information

COUNTERCLOCKWISE (CCW) ROTATION

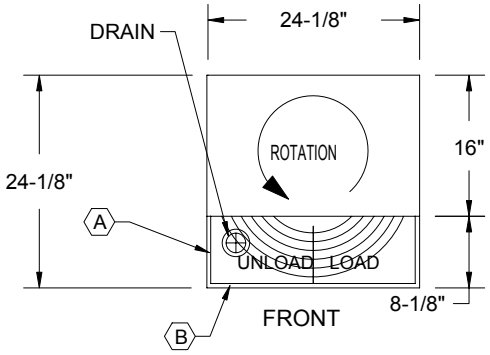

POSSIBLE SWITCH PANEL LOCATIONS

Ⓐ - LEFT SIDE (FOR CCW COCKTAIL STATION)
Ⓑ - FRONT (UNDERBAR-CCW ROTATION)

CLOCKWISE (CW) ROTATION

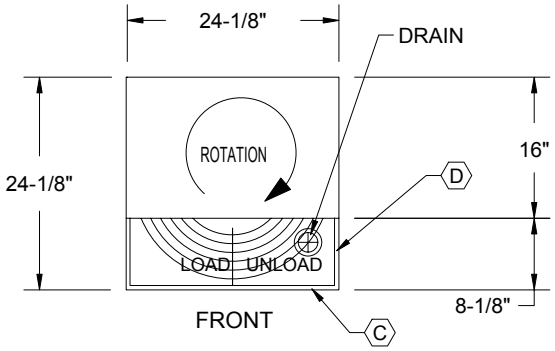

POSSIBLE SWITCH PANEL LOCATIONS

Ⓒ - FRONT (UNDERBAR-CW ROTATION)
Ⓓ - RIGHT SIDE (FOR CW COCKTAIL STATION)

FRONT ELEVATION VIEW

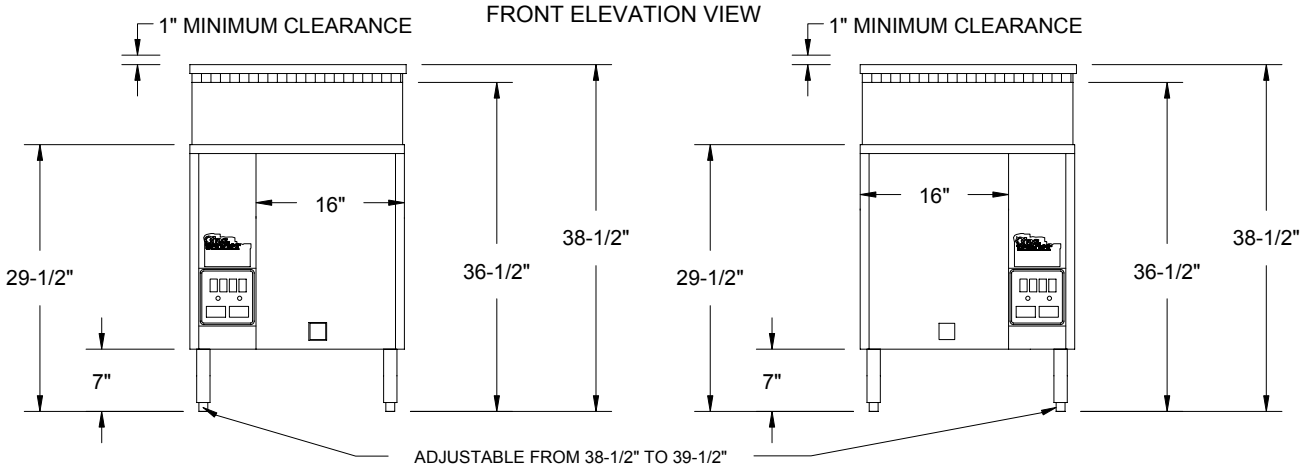

Mechanicals

1. In all cases, consult local plumbing, electrical, and health codes for regulations which may not be consistent with the information on the front of this specification sheet
2. The utility connections are made from the floor at the bottom of the unit approximately 7" to 8" high
3. The Glastender policy of constant quality improvment means specifications are subject to change without notice.
4. Detergent and sanitizer containers are stored externally. Six-foot lenghts of tubing are provided. Storage for two one-gallon containers is required within five feet.
5. Front side service is essential.

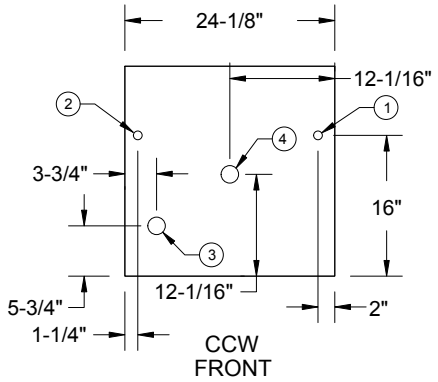

① = HOT WATER
② = COLD WATER
③ = DRAIN
④ = ELECTRICAL

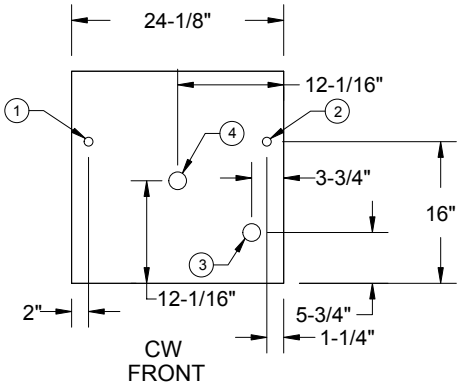

Glastender®
5400 North Michigan Road • Saginaw, MI • 48604-9780
989.752.4275 • 800.748.0423 • Fax 989.752.4444
www.glastender.com

Printed in USA