Project: _____	AIA#
Item #: _____ Qty: _____	SIS#
Model #: _____	

Wait Stations

WS24, WS36, WS36-S

WS24

WS36-S

with optional WPH
wall mount pan holder

Standard Features

- All stainless steel construction
- Integrated back and side splashes
- Radius work surface corners for easy cleaning
- Work surface features front marine edge
- Cabinet includes intermediate shelf and special compartment for vertical tray storage
- Vertical tray storage compartment specifically designed to hold 14" or 16" round server trays
- Recessed hole in tray storage compartment floor prevents round trays from rolling out
- Includes left side mounted menu holder
- WS36-S model includes welded bowl with removable plastic wash rag basin
- Optional wall mount pan holder (WPH) with 6" deep stainless steel pan for use as an ash tray dump or wash rag basin
- Includes wall mounting bracket

Specifications

Drain

- No plumbing required

Bowl Dimensions for model WS36-S

- 9-1/4" by 11-1/2" by 6" deep

Materials

- 20 gauge stainless steel parts include: All components unless otherwise noted
- 16 gauge stainless steel parts include: menu holder and optional wall mount pan holder

Detail showing optional WPH wall mount pan holder installed

Mounting Details

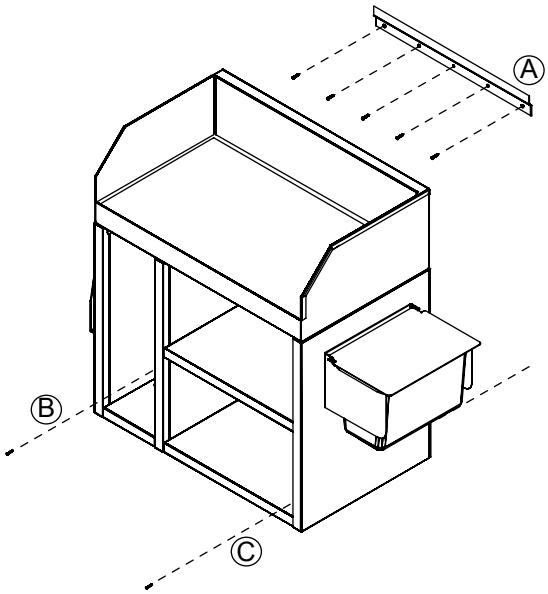

Mounting bracket (A) attaches to the wall. The Wait Station is placed on the mounting bracket, then is secured to the wall with screws at (B) and (C).

Glastender, Inc. • 5400 North Michigan Road • Saginaw, MI • 48604-9780
989.752.4275 • 800.748.0423 • Fax 989.752.4444
www.glastender.com

Specifications subject to change without notice. For current specifications please visit our website.

Approval/Notes:

Wait Stations

Dimensional Information

WS24

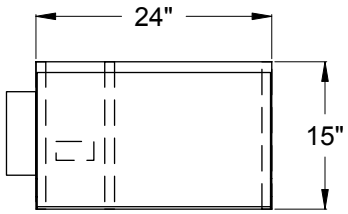

Plan View

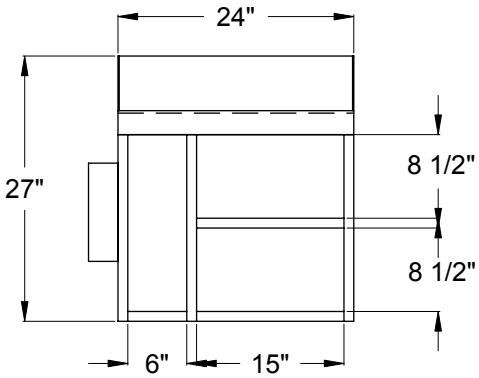

Front View

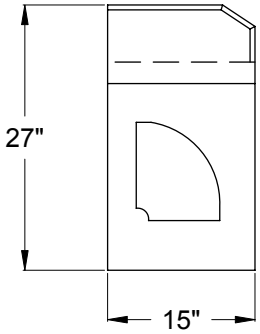

Side View

WS36

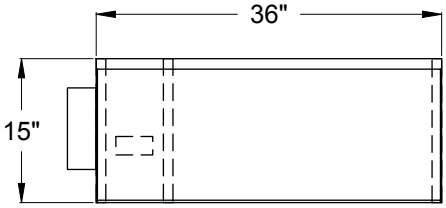

Plan View

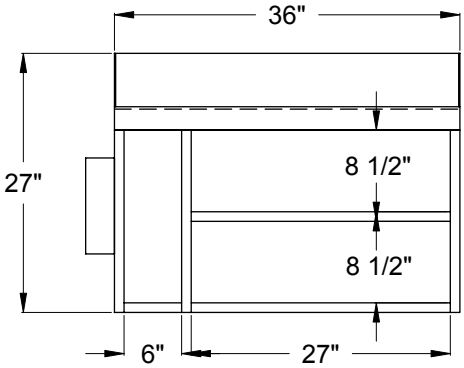

Front View

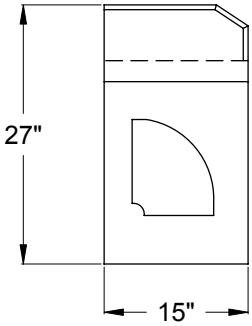

Side View

WS36-S

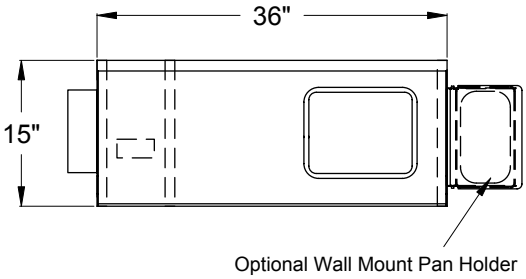

Plan View

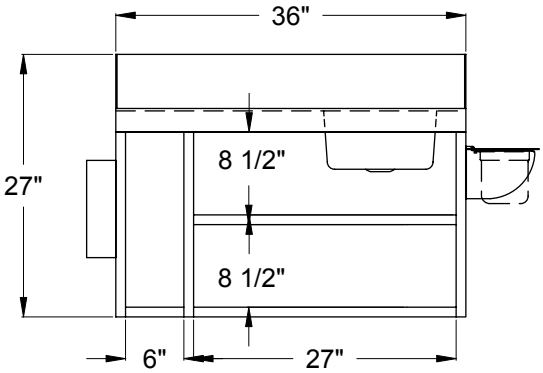

Front View

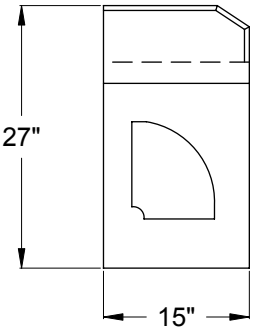

Side View

Glastender®
5400 North Michigan Road • Saginaw, MI • 48604-9780
989.752.4275 • 800.748.0423 • Fax 989.752.4444
www.glastender.com

Printed in USA