BLODGETT®

Project _____

Item No. _____

Quantity _____

SHO-E

MODEL SHO-E

Full-Size Electric Convection Oven

Shown with optional casters

Baking compartment - accepts five 18" x 26" standard full-size baking pans in left-to-right position.
All data is shown per oven section, unless otherwise indicated.
Refer to operator manual specification chart for listed model name.

EXTERIOR CONSTRUCTION

- Full angle iron frame
- Stainless steel front, top, sides and legs
- 25" (635mm) stainless steel legs for single ovens
- 6" (152mm) stainless steel legs for double stacked ovens
- Dependent stainless steel doors, dual pane thermal glass window on left hand door, solid right hand door
- Chrome-plated door handle
- Triple-mounted door hinge pins
- Removable front control panel
- Solid mineral fiber insulation on back, fiberglass insulation on top, sides and bottom

INTERIOR CONSTRUCTION

- Double-sided porcelainized baking compartment liner (14 gauge)
- Aluminized blower wheel
- Five chrome-plated racks, eleven rack positions with a minimum of 1-5/8" (41mm) spacing

OPERATION

- Three tubular heaters
- Thermostat with temperature control range of 200°F (93°C) to 500°F (260°C)
- Two speed fan
- 1/3 horsepower blower motor with automatic thermal overload protection
- Control area cooling fan

STANDARD FEATURES

- Solid state manual control with separate dials to control thermostat and timer
- 25" (635mm) adjustable stainless steel legs (for single units)
- 6" (152mm) adjustable stainless steel legs (for double sections)
- One year oven parts and labor warranty*

* *For all international markets, contact your local distributor.*

OPTIONS AND ACCESSORIES

(AT ADDITIONAL CHARGE)

- **Legs/casters/stands:**
  - ❑ 6" (152mm) seismic legs
  - ❑ 6" (152mm) casters
  - ❑ 4" (102mm) low profile casters
  - ❑ 25" (635mm)stainless steel open stand with rack guide, stainless steel
- ❑ Extra oven racks
- ❑ Flue connector

ENERGY STAR

INTERTEK ETL LISTED C US

NSF.

BLODGETT OVEN COMPANY
www.blodgett.com
44 Lakeside Avenue, Burlington, VT 05401 • Phone: (802) 658-6600 • Fax: (802) 864-0183

MODEL SHO-E

APPROVAL/STAMP

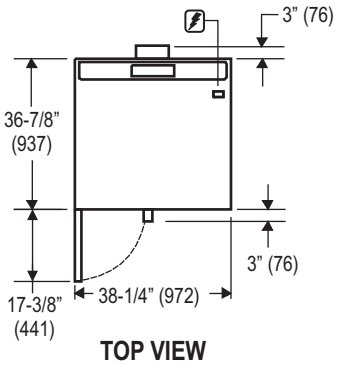

TOP VIEW

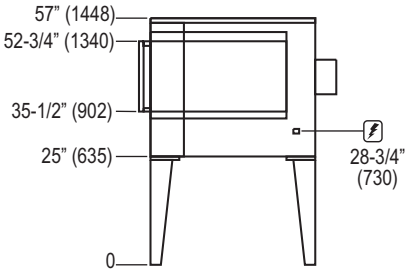

SINGLE

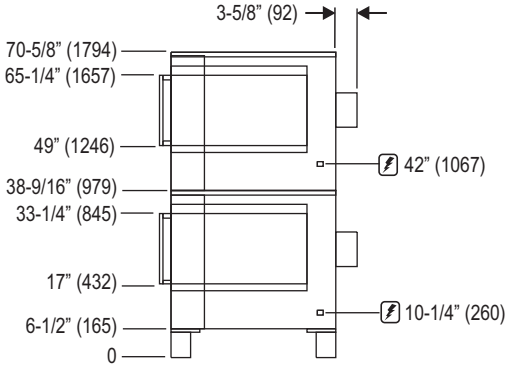

DOUBLE

SHORT FORM SPECIFICATIONS

Provide Blodgett full-size convection oven model SHO-E, (single/double) compartment. Each compartment shall have a fully welded angle iron frame. Interior shall have fully coved porcelainized steel liner and shall accept five 18" x 26" standard full-size bake pans in left-to-right position. Right door shall be stainless steel. Left door shall be stainless steel with dual pane thermal glass. Left door shall have chrome plated handle and dependent operation. Unit shall be electrically heated with three tubular heaters. Air in baking chamber distributed by dual inlet blower wheel powered by a two-speed, 1/3 HP motor with thermal overload protection. Each chamber shall be fitted with five chrome-plated removable racks. Control panel shall be recessed with Cook/Cool Down mode selector switch, electromechanical thermostat, 200 - 500°F (93-260°C), and 60-minute timer. Provide options and accessories as indicated.

DIMENSIONS:

Floor space	38-1/4" (972mm) W x 36-7/8" (936mm) L
Product clearance	1/2" from combustible and non-combustible construction.
Interior	29" (737mm) W x 20" (508mm) H x 24-1/4" (616mm) D
If oven is on casters:	
Single	Add 4-1/2" (114mm) to all height dimensions
Double	Dimensions do not change
Double Low Profile	Subtract 2-1/2" (64mm) from all height dimensions

POWER SUPPLY:

208 VAC	60 Hz.	1 phase	11kW	51/0/51 Amperes
208 VAC	60 Hz.	3 phase	11kW	31/29/29 Amperes
220/240 VAC	60 Hz.	1 phase	11kW	44/0/44 Amperes
220/240 VAC	60 Hz.	3 phase	11kW	26/24/24 Amperes
480VAC	60 Hz	3 phase	11kW	14/13/13 Amperes

** At an additional charge*

MAXIMUM INPUT:

Single	11kW
Double	22kw (11kW each section)

MINIMUM ENTRY CLEARANCE:

Uncrated	32-1/4" (819mm)
Crated	37-3/4" (959mm)

SHIPPING INFORMATION:

Approx. Weight:	**Crated**
Single:	480 lbs. (218 kg)
Double:	960 lbs. (435 kg)

Crate sizes:
37-1/2" (952mm) x 43-1/2" (1105mm) x 51-3/4" (1315mm)

NOTE: *The company reserves the right to make substitutions of components without prior notice*

BLODGETT OVEN COMPANY
www.blodgett.com
44 Lakeside Avenue, Burlington, VT 05401 • Phone: (802) 658-6600 • Fax: (802) 864-0183

Printed in U.S.A.

NOTE: FOR COMMERCIAL USE ONLY

P/N 37106 Rev P (5/11)