BLODGETT®

MODEL HV-50E

Half-Size Electric Oven

HydroVection™

Shown with optional stand and casters

Project _____

Item No. _____

Quantity _____

HV-50E

Standard depth baking compartment - accepts five 13" x 18" standard half-size baking pans in front to back positions.
All data is shown per oven section, unless otherwise indicated.
Refer to operator manual specification chart for listed model names.

EXTERIOR CONSTRUCTION

- Fully welded angle-iron frame
- Stainless steel front, top, sides and back
- Dual Plane tempered glass windows encased in a stainless steel door frame with hinged inner glass for easy cleaning
- Retractable hand shower for ease of cleaning

INTERIOR CONSTRUCTION

- 316 stainless steel liner for easy cleaning
- Two halogen interior lights
- Drain in oven cavity
- Hinged air pressure panel for easy cleaning
- Up to 2.5” of mineral board insulation for greater heat retention
- Three tubular heater element design

OPERATION

- Standard control with function selection for hydro low, hydro high, hot air, and cool down
- Retherm and Fry bands on control
- Hydrovection cook modes provide low or high humidity
- Hot air cook mode for baking and pastries
- One touch cooking
- Four speed auto-reversing fan motor for even bake
- Cavity vent control provides ability to release steam at the push of a switch
- Thermostatically controlled quench system, Eco-Friendly

STANDARD FEATURES

- Removeable core temperature probe
- Retractable hose reel below control panel, no extraneous hoses
- 95 dB beeper on the control panel to compete with even the loudest of kitchens
- Start-up inspection service by factory authorized service agent
- 1 year parts and 1 year labor warranty

OPTIONS AND ACCESSORIES

(AT ADDITIONAL CHARGE)

- **Stands:**
  - ❑ 11" (286mm) stainless steel stand
  - ❑ 29" (737mm) stainless steel stand
- ❑ MenuSelect control can hold multi-stage programming for up to 99 products, includes Cook & Hold and core probe cooking
- ❑ Extra stainless steel oven racks
- ❑ Additional core probe
- ❑ Side heat shield
- ❑ 480 VAC, 3 phase
- ❑ Water pressure regulator

BLODGETT COMBI
www.blodgett.com
44 Lakeside Avenue, Burlington, VT 05401 • Phone: (802) 658-6600 • Fax: (802) 864-0183

MODEL HV-50E

APPROVAL/STAMP

DIMENSIONS ARE IN INCHES (MM)

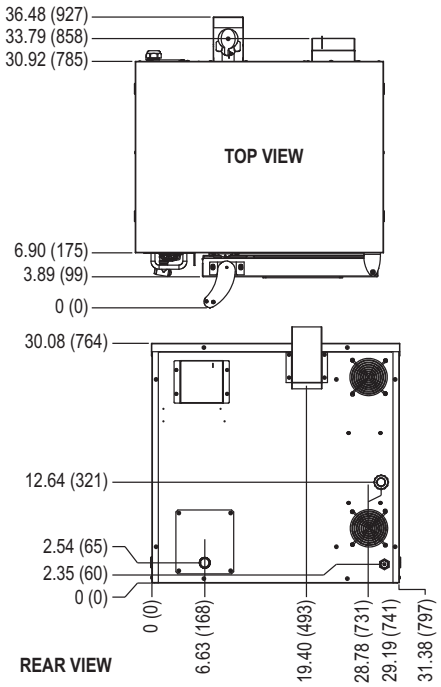

REAR VIEW

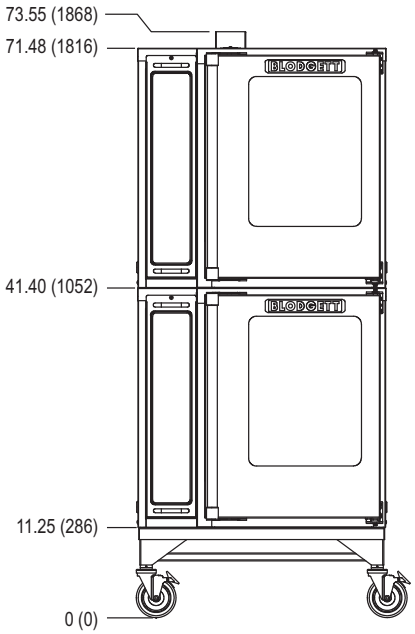

DOUBLE ON 11" STAND

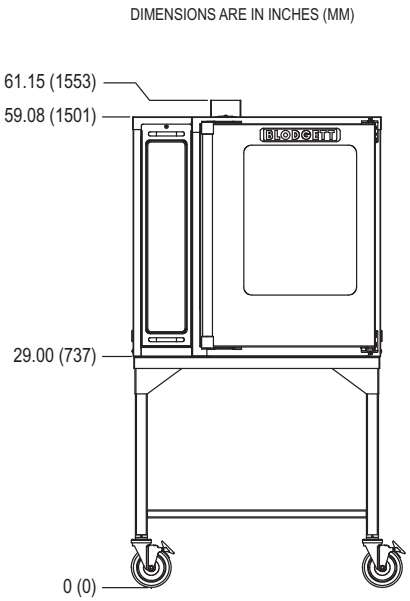

SINGLE ON 29" STAND

SHORT FORM SPECIFICATIONS

Provide Blodgett half-size hydrovection oven model HV-50E, (single/double) compartment with fully welded angle iron frame. Each compartment shall have 316 stainless steel liner. Unit shall accept five 13" x 18" standard half-size bake pans. Doors shall be stainless steel with dual pane thermal glass windows. Unit shall be electrically heated by three tubular elements. Air in baking chamber distributed by single inlet blower wheel powered by a multiple speed, reversing, 1/2 HP motor with thermal overload protection. Each chamber shall be fitted with bright halogen lamps, and five standard chrome-plated removable racks. Retractable hose reel mounted just below the control for easy cleanup. Unit shall have manual control with hydro low and hydro high moisture control, hot air and cool down modes. Breaker shut off switch on front panel for easy service. Start-up inspection service by factory authorized service agent. 1 year parts and 1 year labor warranty. Provide options and accessories as indicated.

DIMENSIONS:

Floor space 31.38" (797mm) W x 36.48" (927mm) D
Interior 15.3" (389mm) W x 20.5" (521mm) H x 22" (559mm) D

Product clearance from combustible and non-combustible construction

Oven sides 0" (0mm) Blodgett recommends 4" clearance from any heat source on the control panel side of the oven, an optional heat shield should be considered.
Oven back 0" (0mm)

WATER SUPPLY (per section):

Good quality water feed is the responsibility of the owner. Water quality must be within the following general guidelines.

TDS: < 100 ppm	Hardness: 80-120 ppm	pH: 7.0 - 8.0
Chlorides: < 30 ppm	Chlorine: 0 ppm	30(min)-50(max) PSI
3/4" garden hose cold water	1" NPT drain connection	140°F (60°C) avg. drain temp.

The best defense against poor water quality is a water filter system designed to meet your water quality conditions. **Filtered water is highly advised.**

Water Consumption
Hydro Mode 1.5 GPH

Appliance is to be installed with backflow protection in accordance with Federal, State or Local codes.

MAXIMUM INPUT:

Single 13kW
Double 26kW (13kW each section)

POWER SUPPLY:

V.A.C.	Hz	Phase	kW	Amperes (L1-L2-L3)
208	60	3	13	38/38/34
240	60	3	13	30/30/28

1/2 H.P., 3 phase motor

MINIMUM ENTRY CLEARANCE:

Uncrated 32" (813mm)
Crated 36" (914mm)

SHIPPING INFORMATION:

Approx. Weight
Per section 350 lbs. (159 kg)

Crate sizes
35-1/2" (902mm) x 42-1/2" (1079mm) x 37-1/2" (953mm)
(2 crates required for double)

NOTE: *The company reserves the right to make substitutions of components without prior notice*

BLODGETT COMBI
www.blodgett.com
44 Lakeside Avenue, Burlington, VT 05401 • Phone: (802) 658-6600 • Fax: (802) 864-0183

Printed in U.S.A. **NOTE:** FOR COMMERCIAL USE ONLY P/N 52417 Rev E (8/10)

Tundra Specialties