BLODGETT®

Project _____

Item No. _____

Quantity _____

951 - Single/Double

MODEL 951
Deck Oven

Ovens consist of basic sections and are a complete and separate unit capable of operating alone or in combination.
All data is shown per oven section, unless otherwise indicated.
Refer to operator manual specification chart for listed model name.

EXTERIOR CONSTRUCTION
- Full angle iron frame
- Stainless steel front, top, sides and back
- Counterbalanced doors with concealed hinges
- Heavy chrome plated tubular steel door handle
- 27-1/2" (699mm) stainless stee legs (for single units)
- 7" (178mm) stainless stee legs (for double units)
- Burner doors open easily for ignition, cleaning or adjustment, without removal of any fastenings
- Vitreous fiber insulation at top, back, sides, bottom and doors

INTERIOR CONSTRUCTION
- 42" x 32" x 12" (1067mm x 813mm x 305mm) oven compartment interior
- Aluminized steel baking compartment liner
- Aluminized steel combustion chamber
- Steel deck supported by an angle iron frame
- 12 gauge (3.02mm) press-formed, reinforced and flanged aluminized steel deck

OPERATION
- Free-floating, easily removable duplex-tube burner
- Removable fixed orifices on main and pilot burner
- Main gas valve, temperature control valve and safety pilot valve fully within section body and are accessible through a covered and ventilated compartment in front.
- Air mixers with adjustable air shutters and locking device
- Liquid pressure thermostat with temperature control range of 200°F (93°C) to 500°F (288°C)

STANDARD FEATURES
- Steel oven deck
- Fahrenheit dial 200°F to 500°F
- Two year parts and one year labor warranty
- Five year limited oven door warranty*

* *For all international markets, contact your local distributor.*

OPTIONS AND ACCESSORIES
(AT ADDITIONAL CHARGE)
- **Flexible gas hose with quick disconnect and restraining device:**
  - ❑ 36" (914 mm)
  - ❑ 48" (1219mm)
- ❑ Casters
- ❑ Stainless steel crown angle trim
- ❑ Vent kit
- ❑ Double or triple connector for stacking
- ❑ Ultra Rokite shelves, 1-1/2" (38.1mm) thick (pizza type shelf)
- ❑ Steam jets

OPTIONS AND ACCESSORIES
(AT NO ADDITIONAL CHARGE)
- ❑ FDTH 300° to 650° temperature thermostat
- ❑ Centigrade dial, 100°C to 300°C

BLODGETT OVEN COMPANY
www.blodgett.com
44 Lakeside Avenue, Burlington, VT 05401 • Phone: (802) 658-6600 • Fax: (802) 864-0183

MODEL 951

APPROVAL/STAMP

DIMENSIONS ARE IN INCHES (MM)

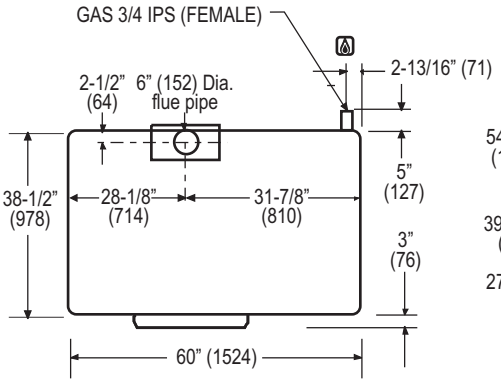

TOP VIEW

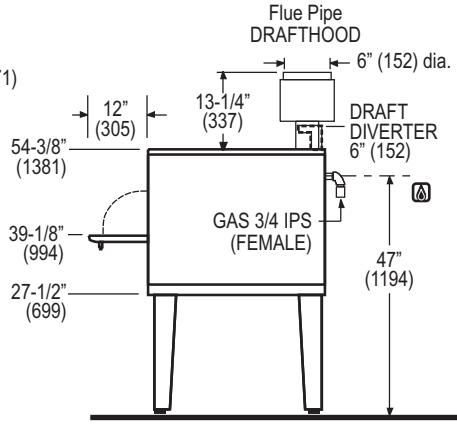

951 Single

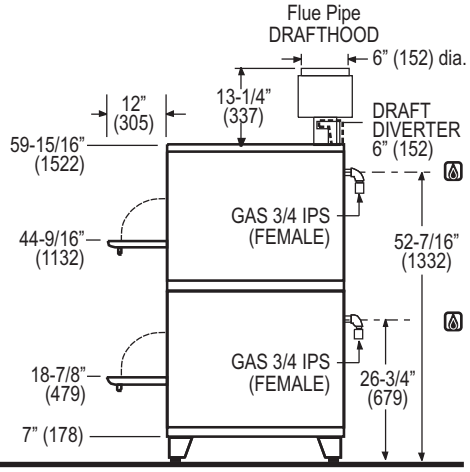

951 Double

SHORT FORM SPECIFICATIONS

Provide Blodgett (single/double) deck oven, model 951. Construction shall be welded stainless steel front, top, back and sides, and shall be fully insulated on all sides. Oven shall be supported by formed adjustable legs. Door(s) shall be counterbalanced (no springs) with concealed hinges and chrome plated tubular steel handles. Separate burner door provided for ignition, cleaning and adjustment. Each baking compartment shall be 42" W x 12" H x 32" D and shall be lined with aluminized steel. Deck shall be 11 gauge press-formed, reinforced and flanged steel. Unit shall be gas heated by a free-floating, easily removable, duplex-type burner controlled by a liquid pressure thermostat with range of 200°F to 500°F. Each compartment provided with flue vent. Provide with two year parts and one year labor warranty. Provide with options and accessories as indicated.

DIMENSIONS:

	Single	Double
Number of sections:	1	2
Number of controls:	1	2
Number of compartments:	1	2
Size of compartment:	(All) 42" (1067mm) W x 12" (305mm) H x 32" (813mm) D	
Area of each compartment:	9.34 sq. ft. (0.87m^2)	9.34 sq. ft. (0.87m^2)
Total area of oven:	9.34 sq. ft. (0.87m^2)	18.68sq. ft. (1.74m^2)
Clearance below oven:	26-1/8" (664mm)	6" (152mm)
Floor space:	(All) 60" (1524mm) wide x 40" (1016mm) deep	
Product clearance:	(All) 6" from combustible and non-combustible construction	

PAN CAPACITIES:

	Single	Double
10" (254mm) pie tins:	12	24
18" x 26" (457mm x 660mm) bun pans:	2	4
9-1/2" x 5" (241mm x 127mm) bread pans:	24	48
9" x 7" (228mm x 178mm) roll pans:	16	32
19" x 4" (483mm x 102mm) pullman pans:	14	28
13" x 16-1/2" (330mm x 419mm) cup tins:	9	18
20" x 28" (508mm x 711mm) roast pans:	2	4
No. 200 pans (324mm x 527mm):	4	8
Bean pots #1:	35	70
#3:	20	40
#6:	12	24
25 lb. (11kg) Turkeys:	5	10

GAS SUPPLY:

3/4" IPS connection at rear of oven

Manifold Pressure:

- Natural – 5" W.C
- Propane – 10" W.C.

Inlet Pressure:

- Natural – 7.0" W.C. min. – 10.5" W.C. max.
- Propane – 11.0" W.C. min. – 13.0" W.C. max.

MAXIMUM INPUT:

Single	38,000 BTU/hr
Double	76,000 BTU/hr

MINIMUM ENTRY CLEARANCE:

Uncrated	28" (711mm)
Crated	32" (813mm

SHIPPING INFORMATION:

Approx. Weight:

Single:	600 lbs. (272kg)
Double:	1230 lbs. (558kg)

Crate sizes:

65" (1651mm) x 32" (813mm) x 46" (1168mm)

NOTE: *The company reserves the right to make substitutions of components without prior notice*

BLODGETT OVEN COMPANY

www.blodgett.com

44 Lakeside Avenue, Burlington, VT 05401 • Phone: (802) 658-6600 • Fax: (802) 864-0183

Printed in U.S.A.

NOTE: FOR COMMERCIAL USE ONLY

P/N 35028 Rev U (6/11)

Tundra Specialties