Hot Water Portable Hand Washing

Elegant for Inside, Durable for Outside

Introducing Our **Nature** Series

Award Winning, Ozark River Portable Sinks has outdone the competition with their Nature Series outdoor portable hygienic hand-washing station with hot water. Beautifully constructed with high quality and durable materials, making it perfect for outdoor use. The cabinet is made from a UV protected high density polyethylene with stainless steel or powder coated sides, inside and back with an all stainless top and basin. These unique cabinets feature elegantly carved accents, with a functional back rib design to allow sink nesting when transporting multiple units.

Each Nature Series sink includes our On-Demand Hot Water System and is ready to unpack and use. Protect your sink from those rainy days and the hot sun with the WetProtect Cover. Mobile cabinet features heavy-duty casters to deliver outdoor hot water hand-washing right where you want it.

No Plumbing Needed.

All Stainless Upgrade

NSF

ANSI

ANSI Accredited Program
PRODUCT CERTIFICATION
NSF's Certification Program is accredited by the American National Standrdss Institut

1 YEAR WARRANTY

Back rib design allows for multiple unit nesting during storage or transporting.

Available with single or triple stainless steel basins featuring a durable powder coated finish, or upgrade to stainless steel.

WETPROTECT
Ozark Sink Cover

Ozark River
Portable Sinks

Nature Series

Portable Hot Water Hand Washing Stations

How Our Model Numbers Work

NSSTK-SS-SS1N

Cabinet Style	Cabinet Color	Top Type	Basin Style	*NSF Listing

* If "N" is not included in the Model Number, the product is not NSF Certified.

Model Number	NSSTK-SS-SS1N
Model Name	Nature Series Single Standard
Number of Basins	Single
Basin Material	Stainless Steel
Basin Dimensions	12" W x 10" L x 5.75" D
Top Material	Stainless Steel
Cabinet Dimensions	25.50" W x 17.50" D x 34.50" H
Cabinet Material	HDPE and Powder Coated Steel
Cabinet Color	Black and Metallic Silver
Protective Cover	Gray Polyester
Product Weight	88 lbs.
NSF Certified	Yes
GPM	0.50
Fresh Water Tank	5 Gallon
Waste Water Tank	6 Gallon
Approx Hand Washings	40 qty. 15 second hand washings
Electrical Requirements	110V, 20A Dedicated Outlet and Breaker
Warranty	One Year

Model Number	NSSSK-SS-SS1N
Model Name	Nature Series Single Premier
Number of Basins	Single
Basin Material	Stainless Steel
Basin Dimensions	12" W x 10" L x 5.75" D
Top Material	Stainless Steel
Cabinet Dimensions	25.50" W x 17.50" D x 34.50" H
Cabinet Material	HDPE and Stainless Steel
Cabinet Color	Black and Stainless Steel
Protective Cover	Gray Polyester
Product Weight	88 lbs.
NSF Certified	Yes
GPM	0.50
Fresh Water Tank	5 Gallon
Waste Water Tank	6 Gallon
Approx Hand Washings	40 qty. 15 second hand washings
Electrical Requirements	110V, 20A Dedicated Outlet and Breaker
Warranty	One Year

Model Number	NSSTK-SS-SS3N
Model Name	Nature Series Triple Standard
Number of Basins	Triple
Basin Material	Stainless Steel
Basin Dimensions	6.125" W x 12.00" L x 5.00" D (each basin)
Top Material	Stainless Steel
Cabinet Dimensions	25.50" W x 17.50" D x 34.50" H
Cabinet Material	HDPE and Powder Coated Steel
Cabinet Color	Black and Metallic Silver
Protective Cover	Gray Polyester
Product Weight	88 lbs.
NSF Certified	Yes
GPM	0.50
Fresh Water Tank	5 Gallon
Waste Water Tank	6 Gallon
Approx Hand Washings	40 qty. 15 second hand washings
Electrical Requirements	110V, 20A Dedicated Outlet and Breaker
Warranty	One Year

Model Number	NSSSK-SS-SS3N
Model Name	Nature Series Triple Premier
Number of Basins	Triple
Basin Material	Stainless Steel
Basin Dimensions	6.125" W x 12.00" L x 5.00" D (each basin)
Top Material	Stainless Steel
Cabinet Dimensions	25.50" W x 17.50" D x 34.50" H
Cabinet Material	HDPE and Stainless Steel
Cabinet Color	Black and Stainless Steel
Protective Cover	Gray Polyester
Product Weight	88 lbs.
NSF Certified	Yes
GPM	0.50
Fresh Water Tank	5 Gallon
Waste Water Tank	6 Gallon
Approx Hand Washings	40 qty. 15 second hand washings
Electrical Requirements	110V, 20A Dedicated Outlet and Breaker
Warranty	One Year

Basin Dimensions

SS-SS1
12"W x 10"L x 5¾"D

SS-SS3
6¼"W x 12"L x 5"D
each basin

Design, colors, prices, options and features are subject to change without notice.

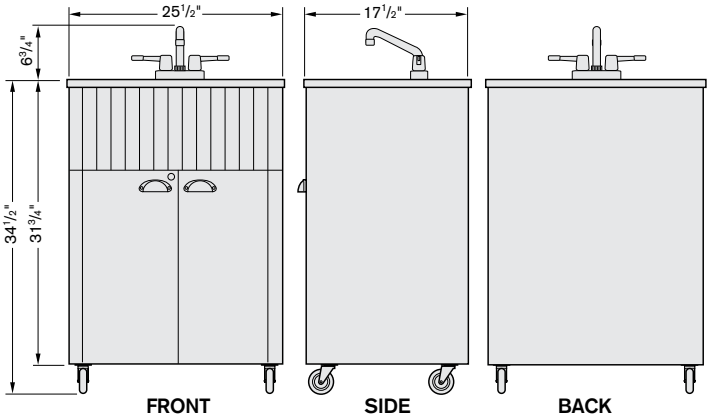

Integrity Distribution LLC
P.O. Box 280
Salem, Missouri 65560
Tech Support: 877.841.3422
Office: 573.729.2057
Fax: 573.729.3846
www.OzarkRiver.com

©2011 Integrity Distribution LLC
NATUR-4C-2P Date: 12/01/11