Quick Guide

SPECIFICATIONS

Lil Advantage 1

Self-Contained Hand Washing Station

Child Height with Extra Storage with Single Stainless Steel Basin

OzarkRiver.com • 1-866-663-1982 • Fax: 573-729-3846

Product Overview

We have taken our Award Winning and Patented Lil' Premier and added an extra roomy phthalates free melamine top and locking storage with an adjustable shelf. The NSF Listed Lil' Advantage is a child height (28") Portable Hygienic Hand-Washing Station with hot water. This child care sized model is the right size to wash those little hands and features a single stainless steel basin mounted in a beautiful, spacious stainless steel top. Every Ozark River Portable Sink includes our On-Demand Pump/Heater System for hot water with scald guard. Independent water reservoirs eliminate any cross-contamination. Ships fully assembled to your door.

CHAVM-LM-SS1N

CHAVM-LM-SS1-N

Cabinet Style | Cabinet Color | Top Type | Basin Style | NSF Listing

NSF

ANSI

ANSI Accredited Program PRODUCT CERTIFICATION

NSF's Certification Program is accredited by the American National Standrdss Institute

Model Number	CHAVM-LM-SS1N
Model Name	Lil Advantage1
Number of Basins	Single
Basin Material	Stainless Steel
Basin Dimensions	12" W x 10" L x 5.75" D
Top Material	Phthalates and Free Melamine
Cabinet Dimensions	48" W x 24" D x 29 H
Cabinet Material	Phthalates and Free Melamine
Cabinet Color	Maple
Product Weight	170 lbs.
NSF Listed	Yes
GPM	0.50
Fresh Water Tank	5 Gallon
Waste Water Tank	6 Gallon
Approx Hand Washings	40 qty. 15 second hand washings
Electrical Requirements	110V, 20 AMP Dedicated Outlet and Breaker
Warranty	2 Years

Quick Facts/Standard Features

- Self-Contained Portable Sink
- NSF Listed Product
- Hot Water System
- Single Stainless Steel Basin
- Phthalates FREE Melamine Top
- Phthalates FREE Melamine Laminate Cabinet with 3 mil. Edgebanding
- Cabinet Available in Maple
- Heavy Duty Swivel Casters, Front Locking
- Locking Cabinet includes 2 keys
- Locking Storage
- Long Faucet Handles (ADA Compliant)
- GFCI Outlet Protection
- Exclusive Quick-Connect Tank

Standard Operating Requirements

- Each sink must have grounded, dedicated 110V, 20 AMP circuit breaker
- Dry, inside level surface.
- If extension cord is used, cord must be 12/3, rated at 20 AMPs or higher
- Water must meet EPA Standards with

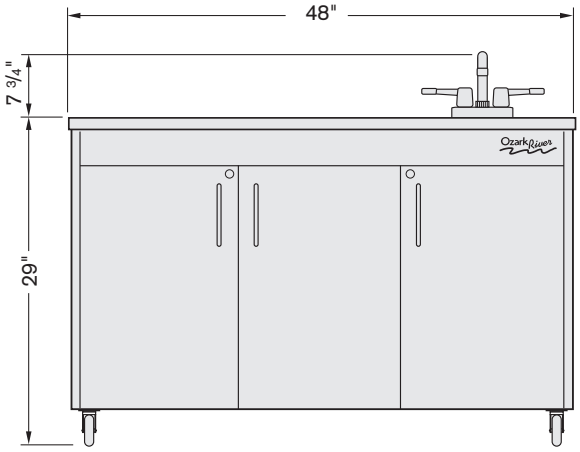

FRONT

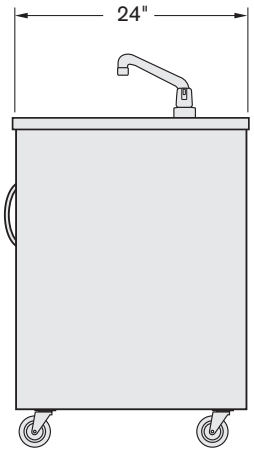

SIDE

Ozark River™ Portable Sinks

©2011 Integrity Distribution LLC