ROYAL SERIES PLUMBING

DECK MOUNT PRE-RINSE

MODEL: 17-202W **PROJECT:** _____ **ITEM #:** _____ **QTY:** _____

PRODUCT IMAGE

17-202W SHOWN

ALSO AVAILABLE IN LOW LEAD BY ADDING "L" TO MODEL NUMBER

STANDARD FEATURES

- 1/4 turn high performance ceramic cartridge valve with built-in back flow preventers
- Base constructed of chrome plated brass
- Pre-assembled at factory to cut installation time
- 44" heavy-duty stainless steel clad flexible hose. Tested to 400 PSI
- Wall bracket included
- Full replacement parts available
- 1 Year Warranty
- Mounting kit included
- **Low Lead Compliance**
  "L" Models meet California AB-1953 and Vermont S152 standards

SPECIFICATIONS

- Single hole deck mount with 1/2" NPT male inlet
- 1 1/8" OD x 2 1/4" shank
- 38" high with 15" overhang
- **Riser Pipe with Hook:** 3/8" NPT x 18". Pre-assembled to base at factory
- **Water Saver Spray Head:** 1 1/2 GPM @ 60 PSI flow rate complies with EPAct 2005
- **Rough in:** Single 1 1/8" round hole
- **Temperature Range:** 40°F to 180°F
- **Flow rate:** 2 GPM max
- **Shipping weight:** 13 lbs.
- **Quantity per case:** 3

CERTIFICATIONS:

Certified to NSF/ANSI 61-G

APPROVED BY:

Due to our commitment to continued product improvement, specifications are subject to change without notice.

Printed in the USA

Krowne Metal Corporation

100 Haul Rd. Wayne, NJ 07470 • Toll Free: (800) 631-0442 • Fax: (973) 872-1129

sales@krowne.com • www.krowne.com • www.facebook.com/KrowneMetal • www.twitter.com/KrowneMetal

Rev. 09/2011

No. 17-202W

Tundra Specialties

ROYAL SERIES PLUMBING

DECK MOUNT PRE-RINSE

MODEL: **17-202W** PROJECT: _____ ITEM #: _____ QTY: _____

DRAWING

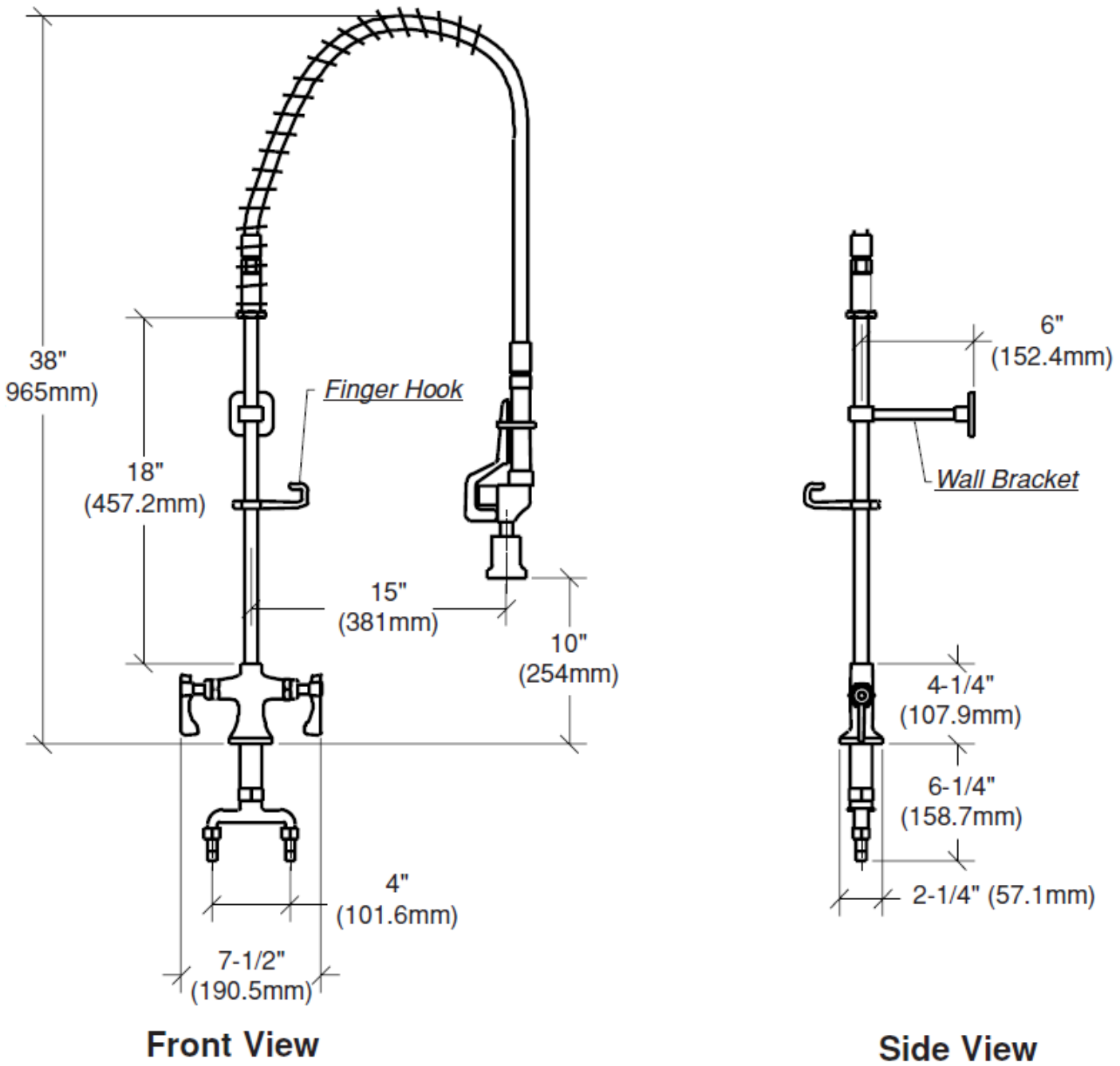

APPROVED BY:

CERTIFICATIONS:

Due to our commitment to continued product improvement, specifications are subject to change without notice.

Printed in the USA

Krowne Metal Corporation
100 Haul Rd. Wayne, NJ 07470 • Toll Free: (800) 631-0442 • Fax: (973) 872-1129
sales@krowne.com • www.krowne.com • www.facebook.com/KrowneMetal • www.twitter.com/KrowneMetal

Rev. 09/2011
No. 17-202W

Tundra Specialties