Aqua-Pure® COMMERCIAL PRODUCTS

MODELS:

DP190

Aqua-Pure® Commercial Series

SPEC #

QUANTITY

APPLICATION

MULTIPLE EQUIPMENT

AT A GLANCE

Aqua-Pure® Model DP190 DUAL-PORT water filtration system provides consistent high-quality water for the multiple applications of cold beverages, ice, and coffee at a combined flow rate to 5 gpm (18.9 lpm). Two separate streams exit the manifold. Both streams have reduced sediment and chlorine taste and odor. One stream has scale-inhibition media added from a dedicated cartridge to reduce the ability of calcium and magnesium to precipitate as hard scale on the evaporator plates of an ice machine and/or the heating coils of a coffee brewer. The other stream supplies cold beverage dispensers and includes no added scale inhibitor.

- DP190 combines chlorine taste and odor reduction with cyst, bacteria and sediment reduction, and provides protection from the harmful effects of scale for total volumes up to 54,000 gallons (204,412 liters).

PRODUCT BENEFITS

- One system with dual outlet connections simultaneously supplies cold beverage dispensers and ice machines/coffee brewers.
- Up to 5 gpm (18.9 lpm) total flow of water especially treated for consistent great-tasting cold beverages, clear and consistent ice, and the perfect cup of coffee or tea.
- Revolutionary **I**ntegrated **M**embrane **P**re-**A**ctivated **C**arbon **T**echnology (**"IMPACT"**) dual-zone media cartridge construction combines a membrane in series with premium activated carbon to provide superior throughput and cartridge life.
- Cartridge Life Guarantee*.
- Certified by NSF to Standard 53 for cyst reduction.
- NSF Standard 42 and/or FDA CFR-21 compliance provides assurance of safety.
- The removal of common water-borne heterotrophic bacteria** by membrane filtration as tested by CUNO.
- Reduced scale build-up on evaporator plates and heating coil from the carefully-controlled (forced-orifice) addition of scale inhibitor as tested by CUNO.
- SQC – Sanitary Quick Change – encapsulated cartridge design allows for fast and easy change-outs with a 1/4 turn while minimizing the possibility of leakage and contamination.
- 3/4" FNPT horizontal inlet and outlet ports allow direct or easily adaptable connections to existing plumbing lines.
- Auxillary inlet gauge port allows optional monitoring of differential water pressure.
- Exhausted cartridges may be incinerated.

PRODUCT SPECIFICATIONS

Model Number	Part Number	Reduction Claims	Micron Rating	Capacity	Service Flow Rate	Application	Replacement Cartridge	Sizing
DP190	56166-01	Cyst, Bacteria, Sediment, Chlorine Taste & Odor, Scale	0.2†	54,000 gallons (204,412 liters)	5.0 gpm (18.9 lpm)	Most Normal Water	DP190 CARTPAK 56138-01	For simultaneous operation of carbonators, coffee machines and ice machines.

* See Aqua-Pure Commercial Products Price Book for Terms and Conditions
**As tested with either E. Coli ATCC (11229) or Pseudomonas (B) diminuta ATC (19146)
† NSF Certified for Particulate, Class I

CUNO® a 3M company

3M

Aqua-Pure® Commercial Products

SPEC #

QUANTITY

MODEL NUMBER

PART NUMBER

Aqua-Pure® COMMERCIAL PRODUCTS

DP190

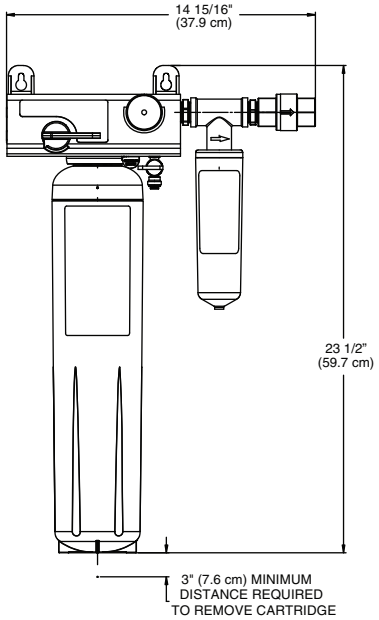

INSTALLATION TIPS

- Shut off downstream equipment prior to installation of the system.
- Choose mounting location to support full system weight when operating.
- Do not exceed operating parameters for temperature or pressure.
- Do not install outdoors.
- For commercial use only.
- Install on cold water line only.

PHYSICAL SPECIFICATIONS

- System includes a single-cartridge manifold with built-in pressure gauge, inlet water shut-off valve, outlet check valve, mounting brackets, a single cartridge filter and a dedicated external scale-inhibition cartridge.
- Auxillary inlet gauge port allows optional monitoring of differential water pressure.
- Inlet and outlet plumbing connections to the mounted head are 3/4" FNPT.
- Large filter cartridges are double o-ring seal type.
- System maximum operating preassure of 125 psi (862 kPa) and a maximum temperature of 100°F (38°C).
- Recommended service flow rate is up to 5.0 gpm (18.9 lpm).
- Large filter cartridge incorporate carbon block media protected by a pleated pre-filter membrane. Second cartridge includes scale-inhibitor media.
- System is NSF Standard 42 and/or CFR-21 compliant.
- Large cartridge body are constructed from high-impact glass-filled polypropylene.
- Cartridges are sanitary in design, requiring no contact with the filter media during cartridge change-out.
- Filter cartridges require no pre-activation.
- A NSF Performance Data Sheet (PDS) is included.
- Shipping weight: Contact Factory
- Operating weight: 16.5 lbs. (7.5 kg)

IMPORTANT: D**o not use with water that is microbiologically unsafe or of unknown quality without adequate disinfection before or after the system.** Systems certified for cyst reduction may be used on disinfected water that may contain filterable cysts. EPA Establishment Number 070595-CT-001.

"CAUTION" To reduce the risks accocoiated with water leakage, which if not avoided, may result in property damage - check with your plumbing professionalto verify that water preassure is less than 125 psi (862 kPa).

CUNO Incorporated recommends regularly scheduled maintenance and replacement of the filter cartridge(s) in order for the product to perform as advertised/sold. **Change the filter cartridge at least every 6 months.** CUNO shall not be liable for system failures due to improper maintenance.

LIMITED 5 YEAR WARRANTY

CUNO makes no guarantees or warranties, expressed or implied, including, but not limited to, any implied warranty of merchantability or fitness for a particular purpose or implied warranty arising out of a course of dealing, custom, or usage of trade whatsoever with respect to these instructions. CUNO shall not under any circumstances be liable to the recipient of these instructions for any direct, indirect, special, incidental, or consequential loss or damages (including, but not limite to, loss of profits, revenue, business, opportunity, or goodwill) resulting from or in any way related to these instructions or the recipient's non-adherence to these instructions, regardless of the legal or equitable theory under which such loss or damages are sought, including breach of warranty or contract, negligence or strict liability.

NSF

Visit www.nsf.org for the claims associated with products that are NSF listed.

CUNO® a 3M company

3M

CUNO Incorporated
400 Research Parkway
Meriden, CT 06450, USA
Toll Free: 1.888.218.CUNO
Worldwide: 203.237.5541
Fax: 203.238.8701
www.cunofoodservice.com

© 2006 3M Company. All rights reserved.
CUNO and Aqua-Pure are trademarks of 3M Company used under license.
NSF is a registered trademark of the National Sanitation Foundation.
LITFS295 0706