CECILWARE®
Since 1911

Iced Tea
Brewers & Dispensers

Dispense Fresh Brewed Iced Tea

NEW PRODUCT

Brews Directly Into Dispenser

Stainless Steel Urn Dispenser

Drip Tray Included

Metal Octagonal Base

Standard Features

- **Easy to Clean Dispenser** – The two piece design is half the height of conventional offerings! This permits easy cleaning in foodservice sinks and pan washing equipment, which typically can not accommodate conventional dispensers.
- **Seamless Stainless Steel Dispenser** – A Cecilware exclusive, facilitates easier cleaning & prevention of contamination.
- **Low Temperature Lockout System** – Will not brew until the water has reached the proper temperature.
- **Brew Timer Adjustment** – Controls the brewing time.
- **Dispenser Urn** – Up to five gallon capacity.
- **Delay Timer Adjustment.**
- **Brew-Through Cover.**

Specifications subject to change without notice.

Fresh Brewed!

Cecilware Corporation 43-05 20th. Avenue, LIC NY 11105
Tel: 800.935.2211 / 718.932.1414 • Fax: 718.932.7860

CECILWARE®
Since 1911
www.cecilware.com

Iced Tea Brewers & Dispensers

Models & Dimensions

TB-3 Brewer with Dispenser

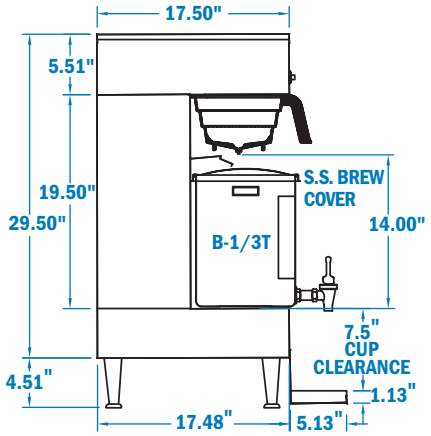

TB-5 Brewer with Dispenser

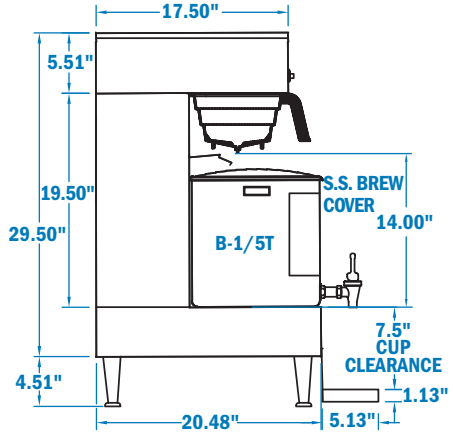

TB-3P Pour-Over Brewer with Dispenser

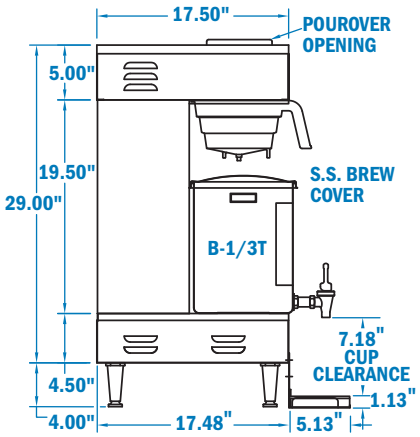

B-1/3 & B-1/5 Dispensers with Base

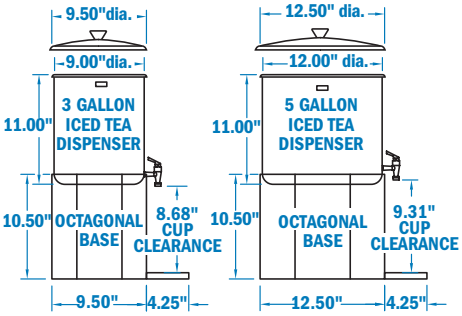

B-1/3T & B-1/5T Dispensers

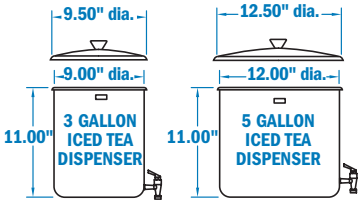

SU3P & SU5P Dispensers with Base

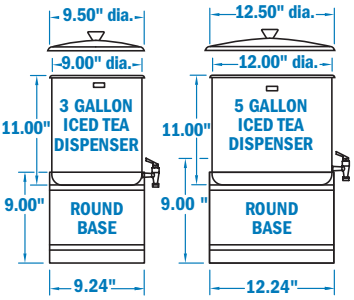

Specifications

Model	Capacity	Brew Time	Dimensions W x D x H	Electrical	Ship Weight
TB-3 Brewer with B-1/3T	3 Gal.	5 min.	9¼" x 22⅝" x 29½"	120V, 1.8KW, 15A	43 lbs.
TB-5 Brewer with B-1/5T	5 Gal.	10 min.	12" x 25⅝" x 29½"	120V, 1.8KW, 15A	50 lbs.
TB-3P Pour-Over Brewer with B-1/3T	3 Gal.	6 min.	9¾" x 22⅝" x 29½"	120V, 1.8KW, 15A	43 lbs.
B-1/3 Dispenser & Base	3 Gal.	-	9½" x 13¾" x 20"	-	11 lbs.
B-1/5 Dispenser & Base	5 Gal.	-	12½" x 16¾" x 20"	-	18 lbs.
B-1/3T Dispenser	3 Gal.	-	9½" x 9½" x 11"	-	6 lbs.
B-1/5T Dispenser	5 Gal.	-	12½" x 12½" x 11"	-	11 lbs.
SU3P Dispenser & Base	3 Gal.	-	9¼" x 9¼" x 18¾"	-	9 lbs.
SU5P Dispenser & Base	5 Gal.	-	12" x 12" x 18¾"	-	15 lbs.

Plumbing: ¼" water line required, except TB-3P. **Electrical:** Line cord included, Nema plug 5-15P. **Optional:** Stainless steel funnel. **Filters:** For plastic funnel, order #412 filters, For stainless steel funnel, order #514 filters. Specifications subject to change without notice.

Cecilware Corporation 43-05 20th. Avenue, LIC NY 11105
Tel: 800.935.2211 / 718.932.1414 • Fax: 718.932.7860

CECILWARE®
Since 1911
www.cecilware.com