Super Deluxe Series

Pizza Prep Table

Insulated Pan Cover
High Quality Stainless Steel Interior and Exterior

* **New NSF Standard 7**
  Complies with and listed under ANSI/NSF-7

* **Excellent Cooling System**
  The powerful forced-air refrigeration system holds the pan and storage cabinet in a constant temperature. Evaporator fans and a newly designed louver allows uniform distribution of cold air over the food pan to keep the food temperature within the New Standard 7.

* **Half Bun Tray Rack for 18"x26" Sheet Pans(Sold Separately)**

* **9 Condiment Pans Included (Size : L 6.9"x D 12.8" x H 5.9")**

* **Stainless Steel Louver**
  Stainless Steel Louver allows distribution of cold air to reach all corners of the unit. It is also built to withstand against food acids and stains, which makes for easy clean up.

* **4 Adjustable Stainless Steel Wire shelves**

* **Self-contained System**
  No plumbing required.
  Simple installation with 10 feet power cord.

* **Recessed Handles**

* **5" Casters Standard**

* **CEC. California Energy Commission Certificated**
* **MEA. City of New York Building Department Approved**

TPR-67SD

LISTED COMMERCIAL REFRIGERATOR AND/ORFREEZER 43BK

IS09001

CEC
MEA

Model	Swing Door	CU./FT.	#of Shelves	HP	AMPS	Weight	L D H	List Price
TPR-67SD	2	20	4	1/2	10.4	395	67 x 32.2 x 35.9	6,864.00
TPR-93SD	3	30.9	6	1/2	10.4	590	93.5 x 32.2 x 35.9	Available Soon

* Height dose not include 6" for caster height.

REFRIGERATOR MANUFACTURER
Turbo air

CABINET INTERIOR/EXTERIOR SPECIFICATIONS

MODEL	TPR-67SD
Exterior Dimensions(LxDxH)	67"x32.3"x41.7"
Cubic Feet	20
Comp.	1/2 HP
Shelves	4 ea
Weight	395lbs
Power	115V / 60Hz
Amp	10.4 A
Cord Length	10 Feet
Plug-In	NEMA 5-15P

*Design and specifications can be changed without prior notice for product improvement.

* **Extra-deep 19 1/2" Full Length Removable Cutting Board Included**
* **Foamed With Polyurethane, High -Density Cell Insulation (CFC free)**
* **Holds 33˚F~41˚F**
* **18 Month Labor and Parts Warranty for Super Deluxe Series**

(unit : inch)

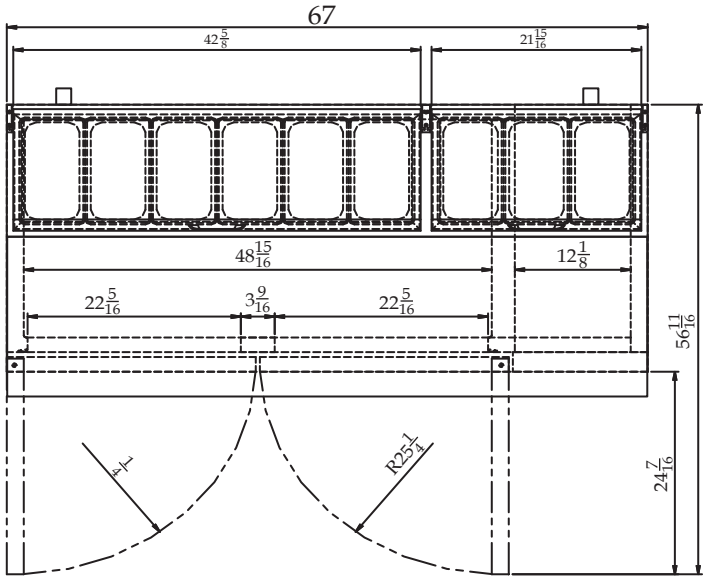

PLAN VIEW

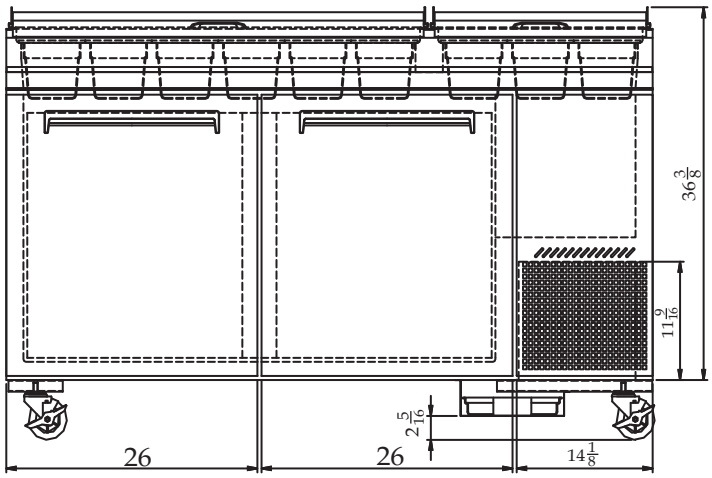

FRONT VIEW

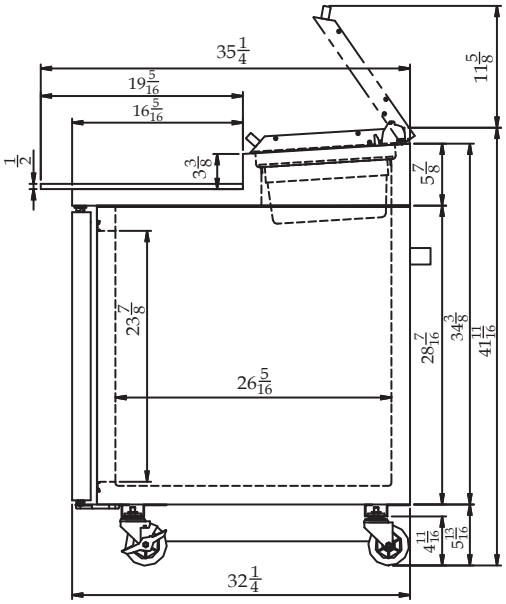

SIDE VIEW