SOUTHBEND

A Middleby Company

COUNTERLINE - GRIDDLE

Heavy Duty, Thermostatic, Gas

Job _____ Item# _____

HDG-24, HDG-36, HDG-48, HDG-60, HDG-72
HDG-24E, HDG-36E, HDG-48E, HDG-60E, HDG-72E

Standard Features

- Available in 24”, 36”, 48”, 60” and 72” widths
- 30,000 BTU burner per 12”
- Stainless steel front, vent and sides are standard, rear and bottom panels are aluminized steel.
- Reinforced, insulated double wall sides
- 1” thick policed rolled steel plate
- 5” high rear and side splash guards
- Flame failure safety device
- Rear gas connection and pressure regulator
- Protected flue opening
- “Insta-on” thermostatic controls for precise settings between 150°F and 400°F
- Imbedded load sensing thermostat
- Exclusive “NO COLD” Zone -Uniform heat distribution across surface
- Each burner equipped with runner tube
- 4” Spatula width grease trough
- Hidden grease drawers with large capacity
- Fully welded griddle plate with protected exhaust vent

(Model HDG-36)

STANDARD CONSTRUCTION SPECIFICATIONS

Exterior Finish: Front, sides and vent are constructed of #3 polished 430 and 304 stainless steel. Bottom and rear are aluminized steel. Sides are reinforced and fully insulated. 5”. rear and side splash.

Griddle Plate: 24”, 36”, 48”, 60”, 72” wide unit with two 15,000 BTU burners every 12”. Fully welded, 1” thick stainless steel griddle plate with side splashers, and grease drawer. Griddle

Controls: Independent, “Insta-on” thermostatic controls with uniform temperature range of 150°F to 400°F.

Legs: Stainless steel 4” adjustable legs.

Gas Heat Control System: Each foot of griddle is heated by a “U” shaped burner. Each burner is controlled by a thermostatic control and is equipped with an independent pilot. For safety, each pilot has a flame failure devise. A 3/4” rear gas connection is standard. Units over 48” wide are constructed of two bodies.

Models: ☐HDG-24 ☐HDG-24E ☐HDG-36 ☐HDG-36E ☐HDG-48 ☐HDG-48E ☐HDG-60 ☐HDG-60E ☐HDG-72 ☐HDG-72E

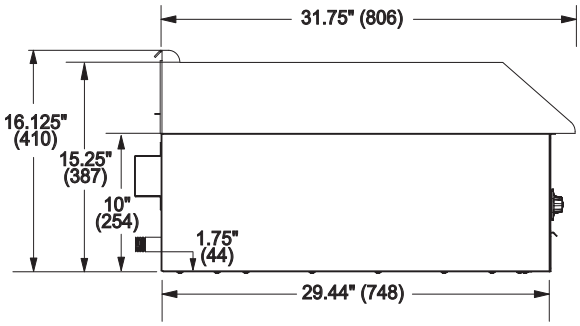

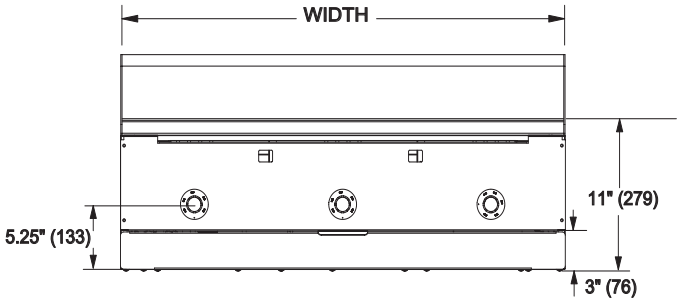

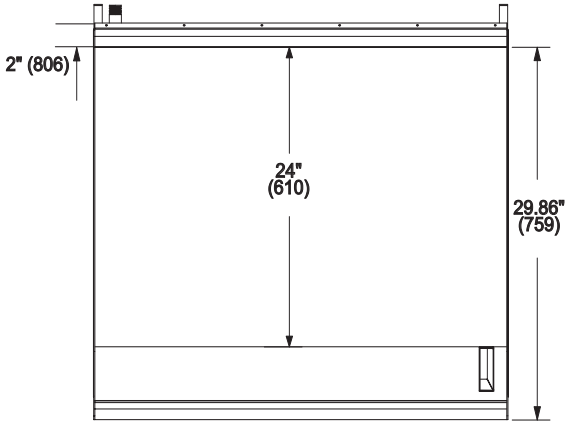

DIMENSIONS & WEIGHT					
Model	**Width**	**Burners BTU each**	**Crated Width**	**Crated Depth**	**Crated Weight**
HDG-24/ HDG-24E	24" (610)	2@ 30,000	31" (788)	39" (991)	305 lbs (139 kg)
HDG-36/ HDG-36E	36" (915)	3@ 30,000	55" (1398)	39" (991)	445 lbs (202 kg)
HDG-48/ HDG-48E	48" (1220)	4@ 30,000	55" (1398)	39" (991)	545 lbs (247 kg)
HDG-60/ HDG-60E	60" (1525)	5@ 30,000	67" (1703)	45.5" (1157)	705 lbs (320 kg)
HDG-72/ HDG-72E	72" (1830)	6@ 30,000	110" (2796)	45.5" (1157)	840 lbs (378 kg)

UTILITY INFORMATION

GAS: Each unit has a 3/4" rear gas connection with a male NPT connector. Minimum supply pressure is 7" W.C. for natural gas and 11" W.C. for propane. All units require a regulated gas supply; pressure regulator to be ordered separately. If using a flexible hose gas connection, the I.D. of the hose must not be smaller than the connector on the unit and must comply with ANSI Z21.69, providing an adequate means of restraint to prevent undue strain on the gas connection.

GAS		
Model	**Natural BTU/Hour**	**Propane BTU/Hour**
HDG-24/ HDG-24E	60,000	60,000
HDG-36/ HDG-36E	90,000	90,000
HDG-48/ HDG-48E	120,000	120,000
HDG-60/ HDG-60E	150,000	150,000
HDG-72/ HDG-72E	180,000	180,000

MISCELLANEOUS

- If casters are used with flex hose, a restraining device should be used to eliminate undue stain on the flex hose.
- Minimum clearance from noncombustible construction is zero. Minimum clearance from combustible construction is 10" on sides and 6" on rear.
- Install under vented hood.
- Check local codes for fire and sanitary regulations.

NOTICE:
Southbend has a policy of continuous product research and improvement. We reserve the right to change specifications and product design without notice. Such revisions do not entitle the buyer to corresponding changes, improvements, additions or replacements for previously purchased equipment.

OPTIONS AND ACCESSORIES

- ❑ Stainless steel stand
- ❑ Stainless steel plate shelf with or without cutting board
- ❑ Casters for stand
- ❑ Electronic pilot ignition
- ❑ Grooved griddle plates
- ❑ 2" high insulator base for mounting on refrigerated base

INTENDED FOR COMMERCIAL USE ONLY.
NOT FOR HOUSEHOLD USE.

SOUTHBEND
1100 Old Honeycutt Rd., Fuquay-Varina, NC 27526
www.southbendnc.com