Item No. _____
Quantity _____

BEVERAGE-AIR

3779 Champion Blvd., Winston-Salem, NC 27105
1-888-845-9800 Fax# 1-336-245-6453
http://www.Beverage-Air.com

Commercial Refrigeration Equipment
General Specification

HINGED GLASS DOOR MARKETMAX™ ICE MERCHANDISER SERIES

MMF49 Freezer
Double Door

MODELS:
MMF49-1-B-ICE
MMF49-1-W-ICE
MMF49-1-B-ICE-LED
MMF49-1-W-ICE-LED

MARKETMAX™ GLASS DOOR ICE MERCHANDISER

Double section glass door ice merchandiser with lighted sign panel used for merchandising and storage of ice.

CABINET CONSTRUCTION

Heavy duty construction includes white coated steel interior walls. White or black exterior finishes are heavy-duty steel with a baked on durable coating.

Foamed-in-place CFC and HCFC-free polyurethane insulation.
Modern, one-piece grille is easily removed for cleaning and servicing.

Freezer models have heated triple pane glass. Inside and outside panes are tempered for added safety. Anti-microbial door handles are standard. Doors provide automatic hold-open feature.

Brightly lighted sign panel.

STORAGE CAPACITY

Raised interior floor racks and backguards prevent bags of ice from blocking proper airflow.

Holds (117) 8 lbs. (4 kg) bags of ice.

ELECTRONIC CONTROL

Electronic thermostat with manual defrost button provides a digital display of cabinet temperatures, which includes status indicators and key pad for any necessary temperature adjustments.

REFRIGERATION

Self-contained bottom mount refrigeration system. Expansion valve refrigerant control on freezer provides quick temperature pull down and reduces compressor run time—meaning reduced energy consumption. Includes automatic condensate disposal. Freezers utilize ozone friendly R404A refrigerant and its defrost system is fully automatic, time-initiated and temperature terminated operation.

Freezer product temperatures from 20°F to 25°F (-6.6°C to –3.8°C).

ELECTRICAL

Interior fluorescent lighting enhances product illumination.
Optional LED lighting provides hidden light source for increased product visibility. LED bulbs last up to 10 times longer compared to fluorescent bulbs and renders additional energy savings due to reduced wattage load on compressor.

Freezer units wired at factory and ready for connection to a 115/60/1 phase, 20 amp dedicated outlet. 8' long cord and plug set included.

MMF49-1-B-ICE
(SHOWN IN BLACK EXTERIOR)

MMF49-1-W-ICE
(SHOWN IN WHITE EXTERIOR)

SPECIAL FEATURES

- MMF49 has earned the ENERGY STAR®
- Holds (117) 8 lbs. (4 kg) bags of ice
- Anti-microbial door handles
- Electronic control with digital display
- Brightly lighted sign panel
- Optional LED lighting
- **Available options:** S/S Exterior, Black Interior, Casters, Audible Alarm With PM Feature, Smart Defrost

115/60/1
NEMA-5-20P
Freezer

ELECTRICAL CONNECTION
Units pre-wired at factory and include 8' long cord and plug set.

*Note: Not all markings may apply to all model variations.

Available From:

Model Specified	_____	**Store#**	_____
Location	_____	**Quantity**	_____

BEVERAGE-AIR

MarketMax™ Glass Door Ice Merchandisers

Model: MMF49-1-B-ICE, MMF49-1-W-ICE

MODEL	MMF49
EXTERNAL DIMENSIONAL DATA	
Length Overall (inches) Length Overall (mm)	52” 1321
Depth Overall (inches) - includes handle Depth Overall (mm) - includes handle	33 3/4” 857
Height Overall— (inches) Height Overall— (mm)	78” 1981
Number of doors	2
Depth with Door Open 90 °	60”
INTERNAL DIMENSIONAL DATA	
NET Capacity (cubic ft.) NET Capacity (Liters)	49 1388
Internal Length Overall (inches) Internal Length Overall (mm)	49” 1245
Internal Depth Overall (inches) Internal Depth Overall (mm)	28 1/2” 724
Internal Height Overall—(inches) Internal Height Overall—(mm)	61 3/4” 1569
Number of shelves	10
ELECTRICAL DATA	
Full Load Amperes 115/60/1	13.8 A
REFRIGERATION DATA	
Horsepower	3/4
WEIGHT DATA	
Gross Weight (Crated lbs)	560
Gross Weight (Crated kg)	254

Note: Not all markings may apply to all model variations.

PLAN VIEWS

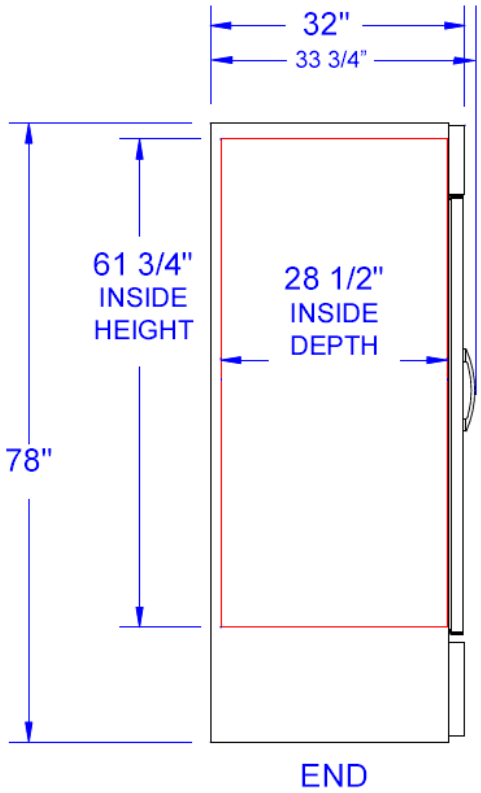

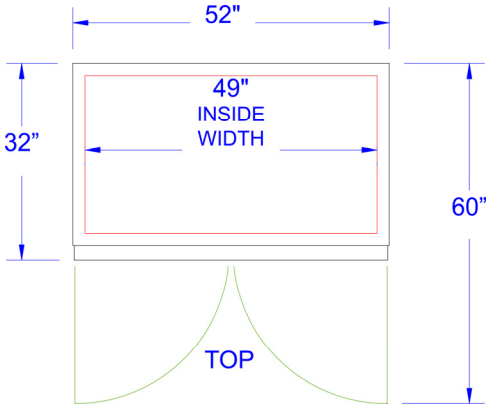

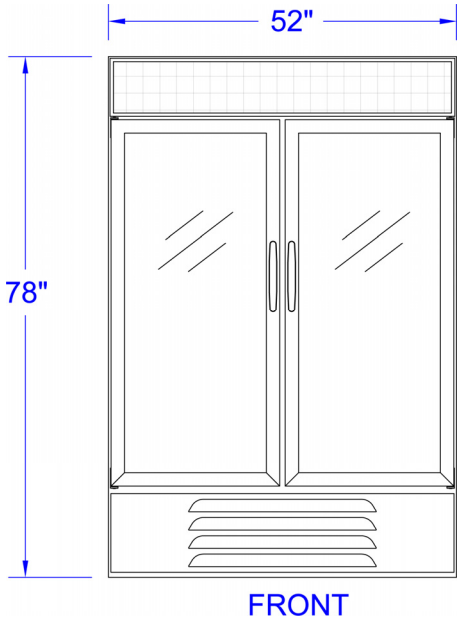

BEVERAGE-AIR® CORPORATION

3779 Champion Blvd. • Winston-Salem, NC 27105 USA • (336) 245-6400 • Fax (336) 245-6453 • (888) 845-9800 • www.beverage-air.com

Specifications are subject to change without prior notice. 03/12

Tundra Specialties