Project #: _____

Item #: _____

AIA File #: _____

Specification #: _____

Imperial CrossFire Over-Fired Broilers

Model Numbers

❏ ICFB-36 ❏ ICFB-45

Model ICFB-36

The Best Choice for High Production Broiling with Consistent, Top Quality Results!

- Top searing plate seals in flavor and moisture.
- Plate is 1/2" (13) thick polished steel with a 4" (102) stainless steel splash guard.
- Intense infra-red radiant heat finishes off the steaks. 84,000 BTU/hr. (25 KW) output for model ICFB-36 and 126,000 BTU/hr. (37 KW) output for model ICFB-45.
- Top mounted burners are cast iron with ceramic radiants. ICFB-36 has 2 burners, ICFB-45 has 3 burners. Each burner is rated at 42,000 BTU/hr. (12 KW) with independent controls and continuous pilots for instant ignition.
- Ceramic radiants direct heat waves downward to penetrate the exposed surface of the meat.
- Oven design creates the ideal combustion environment that maintains the 1000°F to 2500°F (538°C to 1371°C) temperature of the radiants.
- Meat is cooked entirely by radiation, no hot air or convection has contact with the meat. Meats experience minimal shrinkage while retaining juices, tenderness and flavor.
- Easy-lift crank mechanism has “positive catch” locking with infinite adjustment range for grids. Minimum clearance is 2" (51), maximum is 5" (127).
- Grids have a 3" (76) range for precise broiling. Grids adjust on durable, and quiet ball bearings and remove easily for cleaning.
- Grid widths are: model ICFB-36 has two 27" w x 27 d" (686 x 686) grids. Model ICFB-36 has three 35" w x 27 d" (889 x 686) grids.
- Grease pan extends the full width of the broiler and removes for easy clean-ups.
- Large front mounted grease trough catches grease from extended grids. Removes easily for cleaning.

CrossFire Features

- Stainless steel front sides and stand for a professional look and superior cleanability.
- Heavy duty stainless steel stand with locking front casters. Model ICFB-36 stand is 36" w x 34 1/4" d x 4" h base (914 x 870 x 102). Stainless steel legs are 25" h (635) including base.
- One year parts and labor warranty.
- Available in 36" (914) width, model ICFB-36 and 45" (1143) width, model ICFB-45.
- AGA and CGA design certified, NSF and CE listed.

All measurements in ( ) are metric equivalents.

Imperial Commercial Cooking Equipment

1128 Sherborn Street ■ Corona, CA 92879 ■ 800.343.7790 ■ Ph: 951.281.1830 ■ Fx: 951.281.1879

www.imperialrange.com ■ E-mail: imperialsales@imperialrange.com

Imperial CrossFire Over-Fired Broilers

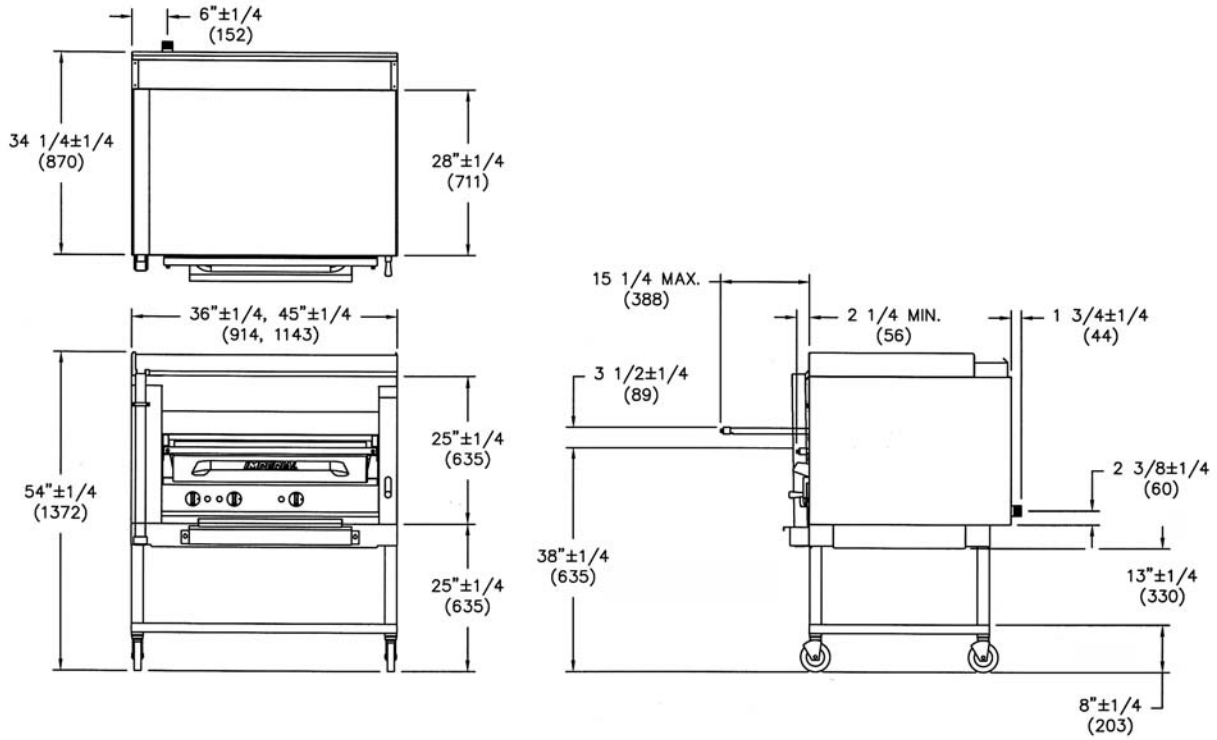

Model#	Burners	Overall Width	Overall Depth	Overall Height	Total Gas Output B.T.U.	(KW)	Ship Weight (Kg.)	Lbs.
ICFB-36	2	36" (914)	31½" (800)	54" (1372)	84,000	(25)	219	483
ICFB-45	3	45" (1143)	31½" (800)	54" (1372)	126,000	(37)	289	638

Crated Dimensions: Height = 56½" (1435) Depth = 34" (864) Width: add 2½" (64) to unit width.
All measurements in ( ) are metric equivalents.

Standard Exterior Specifications

Front, ledge, grease trough, splash guard and sides shall be stainless steel with welded and finished stainless steel seams. Control knobs shall be durable cast metal with a polished chrome finish. Stand shall be stainless steel 25" h (635) with base with 6" (152) casters.

Broiler Specifications

Top mounted burners shall be cast iron with ceramic radiants. Each burner shall be rated at 42,000 BTU/hr. (12 KW) and shall have independent controls and continuous pilots for instant ignition. Total ICFB-36 shall be 84,000 BTU (25 KW), total ICFB-45 shall be 126,000 BTU (37 KW). Ceramic radiants shall direct heat downward and the oven design shall create the ideal combustion environment for maintaining the radiants temperature: 1000°F to 2500°F (538°C to 1371°C).

An easy-lift crank mechanism shall have “positive catch” locking with infinite adjustments for grids. Minimum clearance shall be 2" (51), 5" (127) maximum. Grids shall have a 3" (76) range for precise broiling. Crank shall have durable and quiet ball bearings and remove easily for cleaning. Grid widths shall be:
model ICFB-36 27" w x 27 d" (686 x 686). Two on unit. ICFB-36 35" w x 27 d" (889 x 686). Three on unit.

Grease pan shall extend the full width of the broiler and remove for easy clean-ups. Unit shall have a large, front mounted grease trough which shall remove easily for cleaning.

Griddle Top Specifications

Griddle plate shall be ½" (13) thick, highly polished plate with no breaking-in required. Griddle plate shall have a 4" (102) stainless steel splash guard. Overall griddle depth shall be 31" (787).

Gas: Manifold pressure is 5.0" W.C. for natural gas or 10.0" for propane gas. Manifold size ¾" NPT. ¾" pressure regulator supplied with equipment to be installed at time of connection. Specify type of gas and elevation if over 2000 ft. (610 m).

Clearance: For use only on non-combustible floors. Legs or casters are required for non-combustible floors. Provide 0" clearance from non-combustible surfaces and 8" (203) from combustible surfaces.

Optional Items

- Gas shut off valve ¾" (19)
- Quick disconnect and flexible gas hose

Specification #: _____

AIA File #: _____

Imperial Commercial Cooking Equipment

1128 Sherborn Street ■ Corona, CA 92879 ■ 800.343.7790 ■ Ph: 951.281.1830 ■ Fx: 951.281.1879

www.imperialrange.com ■ E-mail: imperialsales@imperialrange.com

© 2007 Imperial Commercial Cooking Equipment