BUNN®

ITEM#

PROJECT

DATE

Ultra™ High Performance
Frozen Beverage System with 2 Hoppers

Ultra-2, HP
Dimensions:
31.9"H x 16"W x 24.5"D
(81 cm H x 40.6 cm W x 62.2 cm D)

Features

Ultra Gourmet Ice® System

- Reversing auger design quickens freeze time and reduces air mixing.
- Very simple to program and run with touchpad display, which also guides cleaning and preventive maintenance.
- Refrigeration system internally monitored to ensure long lasting performance.
- Large 3 gallon (11.4 litre) hoppers for optimum cooling and serving capacity.
- Full 2-year parts and 1-year labor warranty. 5-year parts and 1-year labor warranty on compressor and 3-year parts and labor warranty on electronics. See the product manual for additional details.
- Sanitation listed by NSF to Standard 6 and 18 (including dairy & alcohol) and safety listed by ETL to UL Standard (UL 471) and CSA Standard (C22.2 No. 120).
- White/Stainless, Black,Stainless and all Black finishes available.
- High Performance versus standard model comparison:

Ambient Room Temp.	Ultra-2 HP is:
70ºF	17% Faster freeze down time
80ºF	21% Faster freeze down time
90ºF	32% Faster freeze down time

Note: The higher the ambient temperature, the greater the improvement.

For current specification sheets and other information, go to *www.bunn.com*.

Related Products

AFPO-2 SL Autofill System (Post-Mix)
Product No. : 28400.0007
Dimensions: 7.8"H x 17.5"W x 12.7"D
19.81 cm H x 44.45 cm W x 32.26 cm D

Liquid Autofill Kits (LAF)
For use with external brix pumps.
Product No.: 37960.0000 (4 water lines)
Product No.: 37960.0001 (2 water lines)

Conversion Kits
Kits convert hoppers on CDS-2 machine to new ULTRA-2 style hopper/faucet.

CDS-2 Hopper Kit (white)
Product No.: 28485.0042

CDS-2 Hopper Kit (black)
Product No.: 28485.0043

CDS-2 Hopper Kit (no lid)
Product No.: 28485.0044

CDS-2 Hopper Kit (flat lid)
Product No.: 28485.0045

Kit for Ultra-2 Lid Lock
Part Number: 34996.0000 (white)

Kit for Ultra-2 Lid Lock and Handles
Part Number: 34996.0002 (white)

Kit for Ultra-2 Handle Lock
Part Number: 34996.0004 (white & black)

Kit for Ultra-2 Lid Lock Kit
Part Number: 34996.0001 (black)

Kit for Ultra-2 Lid Lock and Handles
Part Number: 34996.0003 (black)

Model	Agency Listing
ULTRA-2, HP	NSF, ETL

Dimensions & Specifications

Model	Product #	Volts	Amps	Capacity	Cubic Measure	Shipping Weight	Cord Attached
ULTRA-2, HP (Stainless/White)	34000.0079	120	12	2 Hoppers@3.0 gal	14.9 ft^3	137 lbs.	Yes*
ULTRA-2, HP (Stainless/Black)	34000.0081	120	12	2 Hoppers@3.0 gal	14.9 ft^3	137 lbs.	Yes*
ULTRA-2, HP (All Black)	34000.0080	120	12	2 Hoppers@3.0 gal	14.9 ft^3	137 lbs.	Yes*

**Power cord (NEMA 5-15P) 15 Amp-120V machine only.*

Electrical: Models require 2-wires plus ground service rated 120V, single phase, 50/60 Hz.

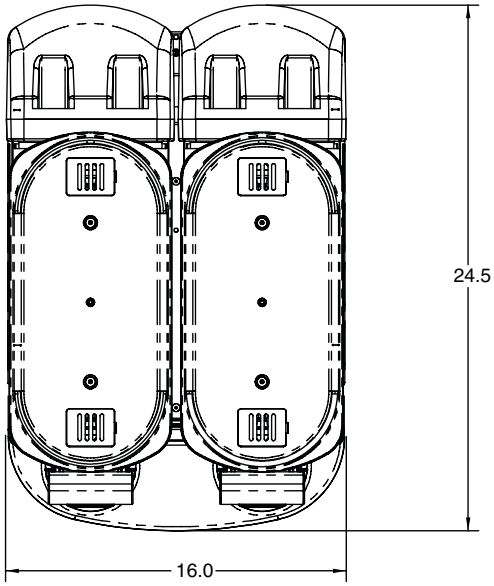

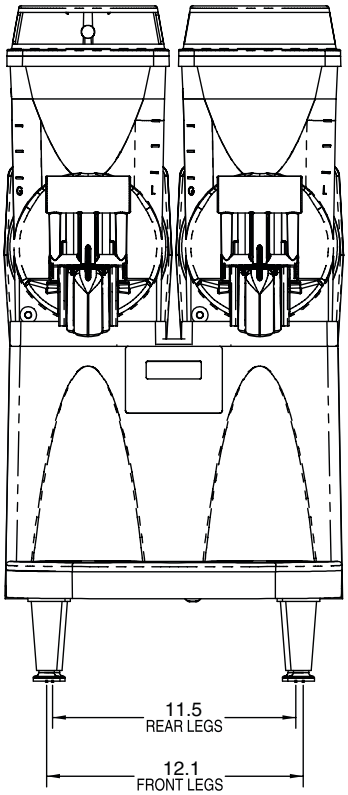

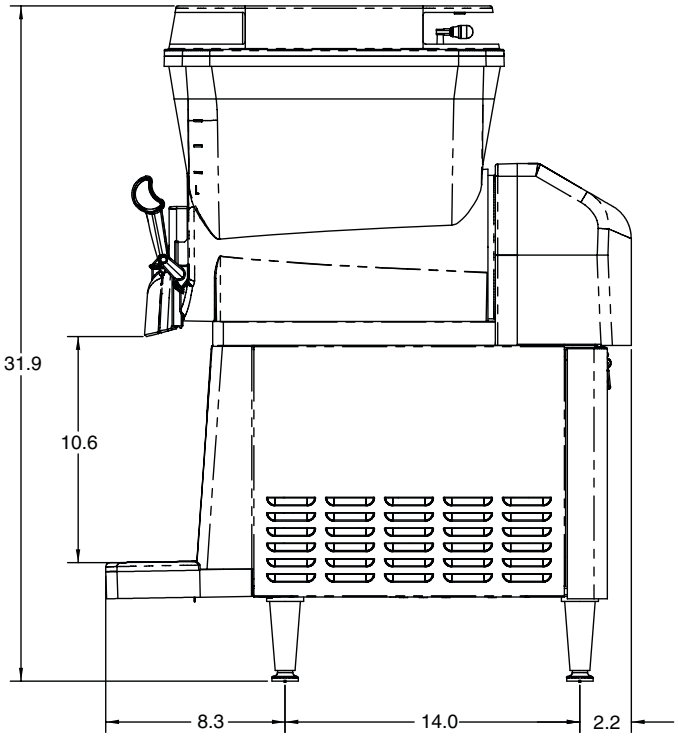

Bunn-O-Matic® Corporation - 1400 Stevenson Drive Springfield, Illinois 62703 • 800-637-8606 • 217-529-6601 • Fax 217-529-6644 • www.bunn.com

BUNN® practices continuous product research and improvement. We reserve the right to change specifications and product design without notice. Such revisions do not entitle the buyer to corresponding changes, improvements, additions or replacements for previously purchased equipment.

All dimensions shown in inches.

7/10 © Bunn-O-Matic Corporation