TRUE FOOD SERVICE EQUIPMENT, INC.
St. Charles Industrial Center • P.O. Box 970 • O'Fallon, Missouri 63366
(636)240-2400 • FAX (636)272-2408 • (800)325-6152 • www.truemfg.com
Parts Dept. (800)424-TRUE • Parts Dept. FAX# (636)272-9471

Project Name: _____
Location: _____
Item #: _____ *Qty:* _____
Model #: _____

AIA #
SIS #

Model:
TWT-27F

Worktop:
Solid Door Freezer

TWT-27F

- True's worktop units are designed with enduring quality that protects your long term investment.
- Designed using the highest quality materials and components to provide the user with colder product temperatures, lower utility costs, exceptional food safety and the best value in today's food service marketplace.
- Oversized, environmentally friendly (R404A) forced-air refrigeration system holds -10°F (-23.3°C). Ideally suited for both frozen foods and ice cream.
- All stainless steel front, top and cabinet ends. Matching aluminum finished back. Cabinet top and backsplash - one piece formed construction. Bacteria and food particles can not be trapped underneath as with other two-piece worktop units.
- Front breathing.
- Foamed-in-place, high density polyurethane insulation (CFC free).
- Heavy duty PVC coated wire shelves.

ROUGH-IN DATA

Specifications subject to change without notice.
Chart dimensions rounded up to the nearest 1/8" (millimeters rounded up to next whole number).

Model	Doors	Capacity (Cu. Ft.) (liters)	Shelves	Cabinet Dimensions (inches) (mm) L	D†	H*	HP	Voltage	Amps	NEMA Config.	Cord Length (total ft.) (total m)	Crated Weight (lbs.) (kg)
TWT-27F	1	6.5 185	2	27 5/8 702	30 1/8 766	33 3/8 848	1/3 1/3	115/60/1 230-240/50/1	8.3 3.4	5-15P ▲	7 2.13	195 89

† Depth does not include 1" (26 mm) for rear bumpers.
* Height does not include 6 1/4" (159 mm) for castors or 6" (153 mm) for optional legs.

▲ Plug type varies by country.

MADE IN U.S.A. SINCE 1945 · 5 YEAR COMPRESSOR WARRANTY USA · ENERGY SAVINGS

12/05 Printed in U.S.A.

APPROVALS:

AVAILABLE AT:

Model:

TWT-27F

Worktop:
Solid Door Freezer

STANDARD FEATURES

DESIGN
- True's commitment to using the highest quality materials and oversized refrigeration systems provides the user with colder product temperatures, lower utility costs, exceptional food safety and the best value in today's food service marketplace.

REFRIGERATION SYSTEM
- Factory engineered, self-contained, capillary tube system using environmentally friendly (CFC free) R404A refrigerant.
- Oversized, factory balanced refrigeration system with guided airflow to provide uniform product temperature.
- Extra large evaporator coil balanced with higher horsepower compressor and large condenser; maintains -10°F (-23.3°C). Ideal for both frozen foods and ice cream.
- Sealed, cast iron, self-lubricating evaporator fan motor and larger fan blades give True worktop units a more efficient low velocity, high volume airflow design. This unique design insures faster temperature recovery and shorter run times in the busiest of food service environments.
- Condensing unit access in back of cabinet, slides out for easy maintenance.
- Automatic defrost system time-initiated, time-terminated.

CABINET CONSTRUCTION
- Exterior - stainless steel front, top and ends. Matching aluminum finished back. Top and backsplash - one piece formed construction.
- Interior - attractive, NSF approved, white aluminum liner. 300 series stainless floor with coved corners.
- Insulation - entire cabinet structure and solid door are foamed-in-place using high density, CFC free, polyurethane insulation.
- 5" (127 mm) diameter stem castors - locks provided on front set. 36" (915 mm) work surface height.

DOOR
- Stainless steel exterior with white aluminum liner to match cabinet interior.
- Door fitted with 12" (305 mm) long recessed handle that is foamed-in-place with a sheet metal interlock to insure permanent attachment.
- Positive seal self-closing door with 90° stay open feature. Door swings within cabinet dimensions.
- Magnetic door gasket of one piece construction, removable without tools for ease of cleaning.

SHELVING
- Two (2) adjustable, heavy duty PVC coated wire shelves 23 1/4"L x 16"D (591 mm x 407 mm). Four (4) chrome plated shelf clips included per shelf.
- Shelf support pilasters made of same material as cabinet interior; shelves are adjustable on 1/2" (13 mm) increments.

MODEL FEATURES
- Evaporator is epoxy coated to eliminate the potential of corrosion.
- NSF-7 compliant for open food product.

ELECTRICAL
- Unit completely pre-wired at factory and ready for final connection to a 115/60/1 phase - 15 amp dedicated outlet. Cord and plug set included.

115/60/1
NEMA-5-15R

OPTIONAL FEATURES/ACCESSORIES
- ❒ 230 - 240V / 50 Hz.
- ❒ 6" (153 mm) standard legs.
- ❒ 6" (153 mm) seismic/flanged legs.
- ❒ 2 1/2" (64 mm) diameter castors.
- ❒ Basic overshelf.
- ❒ Single utility shelf.
- ❒ Double utility shelf.
- ❒ 28 1/4" (718 mm) deep, 1/2" (13 mm) thick, white polyethylene cutting board. Requires "L" brackets.
- ❒ 28 1/4" (718 mm) deep, 1/2" (13 mm) thick, composite cutting board. Requires "L" brackets.
- ❒ Additional shelves.
- ❒ Heavy duty, 16 gauge tops.
- ❒ ADA compliant models with 34" (864 mm) work surface height.
- ❒ Remote cabinets (condensing unit supplied by others; system comes standard with 404A expansion valve and requires R404A refrigerant). Consult factory technical service department for BTU information.

PLAN VIEW

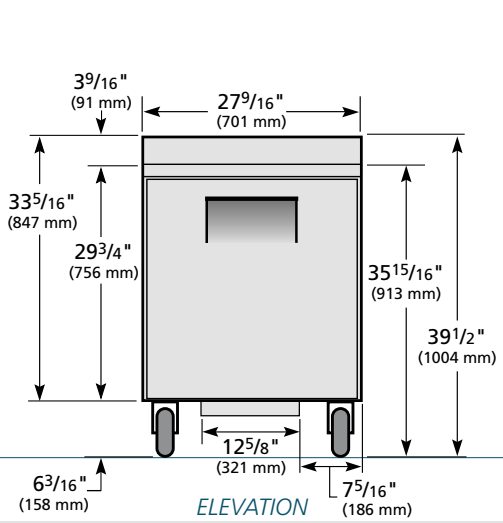

ELEVATION

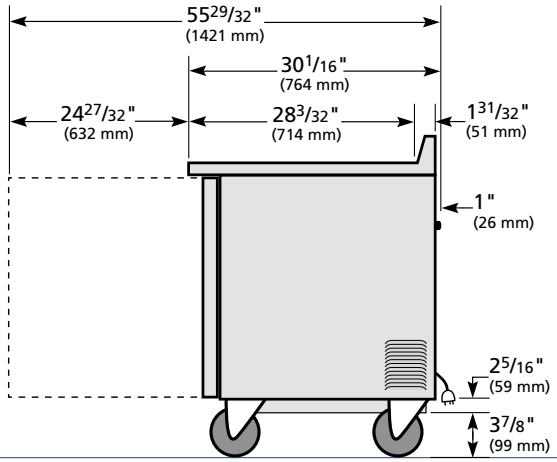

RIGHT VIEW

WARRANTY
One year warranty on all parts & labor and an additional 4 year warranty on compressor. (U.S.A. only)

METRIC DIMENSIONS ROUNDED UP TO THE NEAREST WHOLE MILLIMETER

SPECIFICATIONS SUBJECT TO CHANGE WITHOUT NOTICE

Model	Elevation	Right	Plan	3D
TWT-27F	TFPY01E	TFPY01S	TFPY01P	TFPY013

TRUE FOOD SERVICE EQUIPMENT
St. Charles Industrial Center • P.O. Box 970 • O'Fallon, Missouri 63366 • (636)240-2400 • FAX (636)272-2408 • (800)325-6152 • www.truemfg.com