BUNN®

ITEM#

PROJECT

DATE

3 Gallon Iced Tea Brewer with Portable Server

Model TB3Q with TDO-4 Dispenser
(TDO-4 sold separately)
Dimensions (29" trunk): 34" H x 11.6" W x 22"D
(86.4cm H x 29.5cm W x 58.4cm D)
Dimensions (25.75" trunk): 31" H x 11.6" W x 22" D
(78.7cm H x 29.5cm W x 58.4cm D)

Features

Iced Tea Brewer

- Brews 16.3 to 26.7 gallons (61.7 to 101.1 litres) per hour from real tea leaves.
- Brews directly into any style portable server.
- Meet your volume needs; brew 3 gallons (11.36 litres) of iced tea at a time.
- Quickbrew (Q) models available for shorter brewing cycles.
- SplashGard® funnel deflects hot liquids away from the hand.
- TB3 has adjustable steep time for more control over flavor extraction.
- International electrical configurations available.

Sweetener Model Features

- Separate inlet for sweetener - use existing CO2 systems or external 3rd party pump for sweetener delivery.

TB3/TB3Q	Tea Dispensers
25.75" trunk	TD4, TDS-3, TDO-4
29" trunk	TD4,TD4T, TDS-3, TDS-3.5, TDO-4, TDO-5, TDO-N-3.5, TDO-N-4

For current specification sheets and other information, go to *www.bunn.com*.

Related Products

Easy Clear® EQHP-Tea
Product No. : 39000.0007

Easy Clear® EQHP-TEACRTG
Replacement Cartridge
Product No. : 39000.1007

Single/Dual Filter Pack
Product No. : 20100.0000
Packed per case: 500
Dimensions: 5¼" Base x 3¾" Sidewall
13.34 cm Base x 9.52 cm Sidewall

TDO-4 – Tea Dispenser
Product No. : 34100.0002
Capacity: 4 gallons
Weight: 13 lbs.
Dimensions:
19" H x 10.7" W x 13.7" D
48.26 cm H x 27.18 cm W x 34.8 cm D

TDS-3.0 – Tea Dispenser
Product No. : 33000.0000
Capacity: 3.0 gallons
Weight: 9.4 lbs.
Dimensions:
19"H x 9.8"W x 12.8"D
48.3cm H x 24.9cm W x 32.5cm D

TD4T – Tea Dispenser
Product No. : 03250.0004
Capacity: 4 gallons
Weight: 14 lbs.
Dimensions:
21.9" H x 9" W x 13" D
55.63 cm H x 22.86 cm W x 33.02 cm D

Translucent Pouchpack Tea Funnel
Quick dispense, TU-3Q
Product No. : 35282.0001
Standard dispense, TU-3
Product No. : 35282.0002

Model	Agency Listing
TB3Q	UL LISTED NSF
TB3	UL LISTED NSF

Dimensions & Specifications

Model	Product #	Volts	Amps	Tank Heater Watts	Total Watts	Brewing Capacity	Cubic Measure	Shipping Weight	Cord Attached
TB3[/]	36700.0009	120	14.4	1680	1730	16.3 gal./hr.	8.8 ft^3	43 lbs.	Yes[†]
TB3Q[/]	36700.0013	120	14.4	1680	1730	26.7 gal./hr.	8.8 ft^3	42 lbs.	Yes[†]
TB3	36700.0030	120	14.4	1680	1730	16.3 gal./hr.	7.9 ft^3	42 lbs.	Yes[†]
TB3Q[/] w/TD4T	36700.0041	120	14.4	1680	1730	26.7 gal./hr.	10 ft^3	55 lbs.	Yes[†]
TB3[/] Sweetner	36700.0043	120	14.4	1680	1730	16.3 gal./hr.	8.8 ft^3	44 lbs.	Yes[†]
TB3[/μ]	36700.0055	120	14.4	1680	1730	16.3 gal./hr.	8.8 ft^3	42 lbs.	Yes[†]
TB3Q[#]	36700.0059	120	14.4	1680	1730	26.7 gal./hr.	8.8 ft^3	41 lbs.	Yes[†]
TB3Q*[/]	36700.0076	120	14.4	1680	1730	26.7 gal./hr.	8.8 ft^3	42 lbs.	Yes[†]
TB3Q[/] w/TD4T	36700.0080	120	14.4	1680	1730	26.7 gal./hr.	10 ft^3	55 lbs.	Yes[†]

w/6 foot cord

[*]Quick disconnect. [/]29" trunk height [μ]Has ready light [†]Power cord (NEMA 5-15P) 15 Amp-120V machine only [#]90 oz concentrate

Electrical: Models require 2-wires plus ground service rated at 120V, single phase, 60 Hz.

Plumbing: 20-90 psi (138-621 kPa). Machine supplied with ¼" OD male flare fitting. Requires minimum 1GPM water flow.

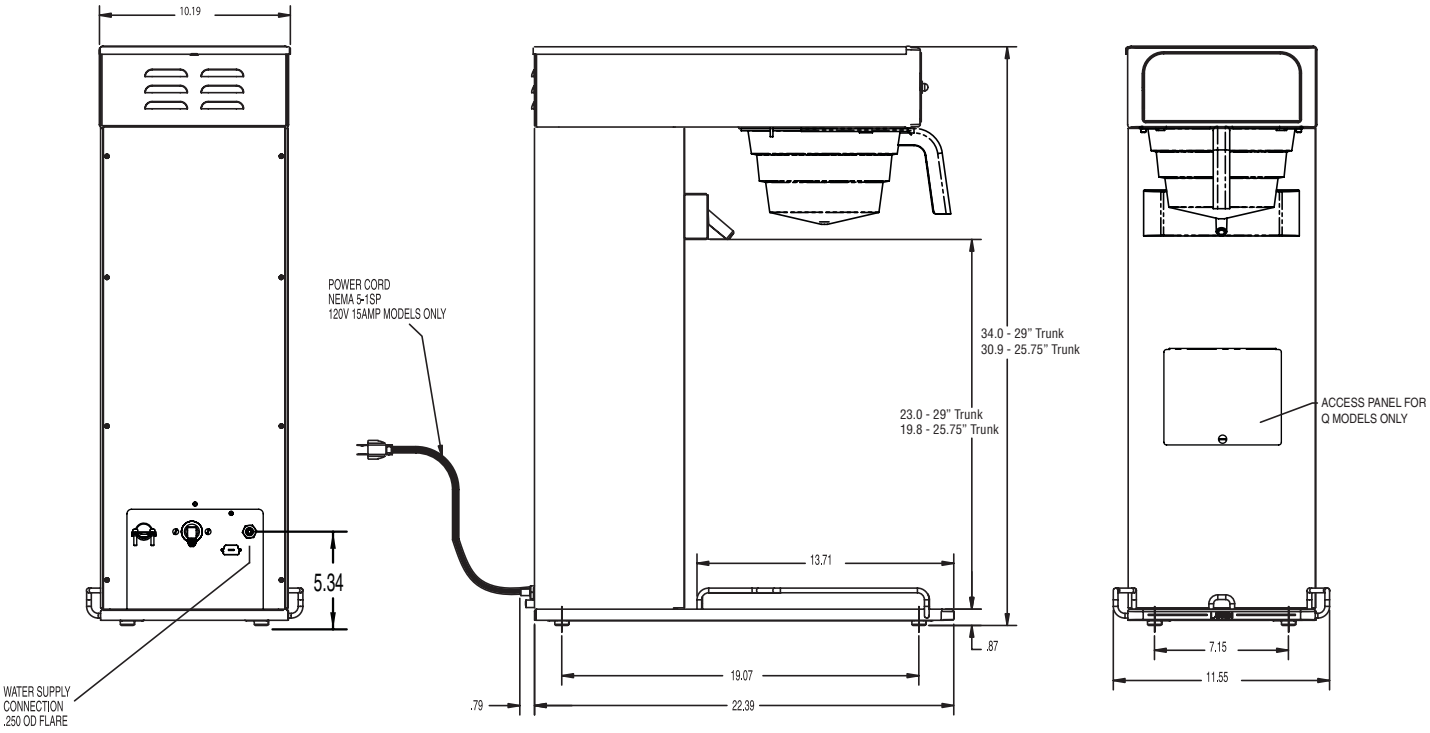

Bunn-O-Matic® Corporation - 1400 Stevenson Drive Springfield, Illinois 62703 • 800-637-8606 • 217-529-6601 • Fax 217-529-6644 • www.bunn.com

BUNN® practices continuous product research and improvement. We reserve the right to change specifications and product design without notice. Such revisions do not entitle the buyer to corresponding changes, improvements, additions or replacements for previously purchased equipment.

All dimensions shown in inches.

2/10 © Bunn-O-Matic Corporation