Project_____

Item No._____

Quantity_____

Model MKH Gas Griddle
24”, 36”, 48”, 60” and 72”

****MKH36**
Equipped with Solid State Controls

****ENERGYSTAR® Models**

STANDARD FEATURES

- 1” (2.5 cm) thick polished griddle plate
- Large 3.75 gallon grease box (two on 72” model)
- Front grease trough, fully welded grease chute
- Tapered splash back
- Double walled stainless sides
- 24 VAC Solid State Controls
- Matchless Ignition System
- 13,333 BTU/hr burner for every 6”, thermostatically controlled every 12”.
- Gas regulator and shut off factory installed
- 4” legs (can be removed for flush mounting)

OPTIONS & ACCESSORIES
(AT ADDITIONAL COST)

- ❑ 24 VAC Digital Solid State Thermostat
- ❑ Chrome griddle plate (includes scraper, spatula, Palmetto brush, and MagiKitch’n griddle cleaner)
- ❑ Griddle plate with Left and Front grease trough
- ❑ Griddle plate with Rear grease trough
- ❑ Service Shelf available in 8”, 10” or 12” depth
- ❑ Pan cutouts for 1/6 -1/9 pan on 10” or 12” shelf
- ❑ Towel bar with or without service shelf
- ❑ Cutting board for 10”or 12” shelf (specify length)
- ❑ Gas hose with quick disconnect
- ❑ NSF approved, Stainless steel griddle stand with legs
  - ❑ Stand with optional casters
- ❑ Prison Security Package

STANDARD SPECIFICATIONS
CONSTRUCTION

- Heavy 1” (2.5 cm) thick polished griddle plate
  - *Optional*: Chrome plated top with mirror finish
- Side skirting fully welded around plate perimeter
- Extra smooth 11 ga. skirt finish for ease of cleaning
- Tapered splash back with no debris contour
- Wide 3-1/2” (8.9 cm) spatula wide front grease trough
- Grease chute is fully welded to stop grease migration
- Large 3.75 gal (14ltr) grease box with quick lift handle
- Grease box splash zone compartment
- Double walled and reinforced stainless steel sides
- Solid panel cabinet base for flush mount capability
- Easy to remove cabinet back for easy cleaning
- No exposed fasteners allowing easy cleanup
- All stainless steel independent venturi style burners
- Gas regulator and shutoff are factory installed and recessed for close wall installation

MODELS

- ❑ **MKH24** 53.3 Kbtu/hr (15.6 kW) (56.2 MJ)
- ❑ **MKH36**** 80 Kbtu/hr (23.4 kW) (84.4 MJ)
- ❑ **MKH48**** 106.6 Kbtu/hr (31.2 kW) (112.4 MJ)
- ❑ **MKH60**** 133.3 Kbtu/hr (39.1 kW) (140.6 MJ)
- ❑ **MKH72**** 160 Kbtu/hr (46.8 kW) (168.8 MJ)

CONTROLS

- 24 Vac Solid State Thermostat includes matchless ignition which automatically lights the pilot when the power is turned on. Cooking surface is thermostatically controlled from 150°F to 550°F. Pilot ready lights and power switches are recessed. Power switches include a Heat on indicator light.
- All temperature probes are embedded into the plate for faster response time and more accurate surface temperatures.
- All pilots have a flame loss safety shutoff. One pilot operates up to two thermostat cook zones

Model MKH Gas Griddle 24”, 36”, 48”, 60” and 72”

MagiKitch’n • P.O. Box 501, Concord, NH 03302-0501 • 509 Route 3A, Bow, NH 03304
603-225-6684 • FAX: 603-225-8497 • www.magikitch’n.com

Model MKH Gas Griddle 24”, 36”, 48”, 60” and 72”

Model MKH Gas Griddle 24”, 36”, 48”, 60” and 72”

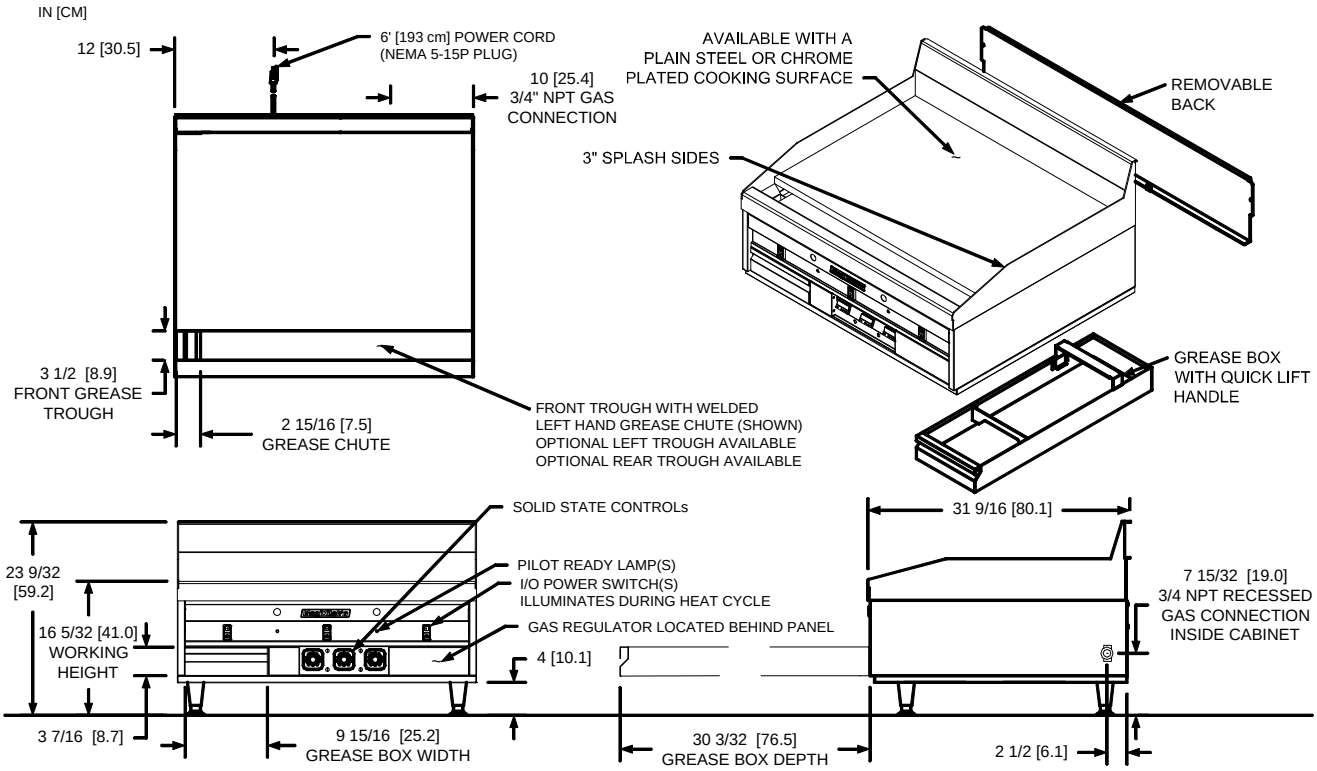

INDIVIDUAL GRIDDLE SPECIFICATIONS

Model	Cooking Area	Control #	Width	Grease Box	Gas Input Rate / Hr	Burner Pressure Nat
MKH24	24 x 23-3/4 in (61x 60cm)	2	24" (61cm)	Left	53,300 BTUs (15.6 kW)(56.2 MJ)	4" W.C. (10 mbars / 1 kPa)
MKH36	24 x 35-3/4 in (61x 90cm)	3	36" (91cm)	Left	80,000 BTUs (23.4 kW)(84.4 MJ)	
MKH48	24 x 47-3/4 in (61x 121cm)	4	48" (122cm)	Left	106,600 BTUs (31.2 kW)(112.4 MJ)	**Burner Pressure LP**
MKH60	24 x 59-3/4 in (61x 151cm)	5	60" (152cm)	Left	133,300 BTUs (39.1 kW)(140.6 MJ)	10 " W.C. (25 mbars / 2.5 kPa)
MKH72	24 x 71-3/4 in (61x 182cm)	6	72" (183cm)	Left & Right	160,000 BTUs (46.8kW)(168.8 MJ)	

GRIDDLE SYSTEM SHIPPING INFORMATION (Approximate)

Unit [1]	Shipping Weight	Shipping Crate Size H x W x L	Shipping Cube
MKH24 Griddle	309 Lbs (140kg)	33 x 23 x 38 in (84 x 58 x 97 cm)	16.7ft^3. (0.5m^3)
MKH36 Griddle	465 Lbs (211kg)	34 x 43 x 40 in (87 x 109 x 102 cm)	33.8 ft^3. (.96 m^3)
MKH48 Griddle	615 Lbs (280 kg)	34 x 55 x 40 in (87 x 140 x 102 cm)	43.3 ft^3. (1.6 m^3)
MKH60 Griddle	775Lbs (352 kg)	43 x 43 x 74 in (109 x 109 x 188 cm)	79.2ft^3. (2.2m^3)
MKH72 Griddle	855 Lbs (388 kg)	43 x 43 x 74 in (109 x 109 x 188 cm)	79.2ft^3. (2.2m^3)

[1] MKH Griddle and Stands are shipped separately (consult factory for shipments with equipment stands)

INSTALLATION INFORMATION

GAS SYSTEM REQUIREMENTS			ELECTRIC SYSTEM REQUIREMENTS [3]					
	Natural Gas	LP Gas	Amps	MKH24	MKH36	MKH48	MKH60	MKH72
Supply Pressure [2]	7 - 14" W.C. (17.4 mbars/ 1.75 kPa)	12 - 14" W.C. (29.9 mbars/ 2.99 kPa)	**115V 50/60Hz**	0.44	0.66	0.88	1.10	1.32

[2] Check plumbing / gas codes for proper gas supply line sizing to sustain burner pressure when all gas appliances are full on.

[3] Required on all MKH Models.

CLEARANCES

Front min.	Bottom min.	Combustible material		Non-Combustible material		Griddle Flue Area
		Sides min.	Rear min.	Sides min.	Rear min.	
30-1/8" (76.5 cm)	0"	2" (5.1cm)	6" (15.2cm)	0"	6" (15.2cm)	Do not block / restrict flue gases from flowing into hood or install vent hood drains over the flue.

SHORT FORM SPECIFICATION

Provide MagiKitch'n gas fired griddle ENERGYSTAR®** performance. Griddle shall be a single 1" thick steel griddle top unit with no debris tapered splash back. Smooth 11 ga. sides with 3-1/2" (8.9cm) wide fully welded front grease trough and chute. Large 3.75gal (14ltr) grease box with quick lift handle. Stainless steel double panel sides and cabinet base. Factory installed gas regulator and shutoff with safety pilot for flame loss shut off protection. Individual thermostat shall be mounted every 12 inches with probes plate embedded. Provide Options & Accessories as follows:

MagiKitch’n • P.O. Box 501, Concord, NH 03302-0501 • 509 Route 3A, Bow, NH 03304
603-225-6684 • FAX: 603-225-8497 • www.magikitch’n.com L10-525 Rev 1 09/11 Printed in the USA
We reserve the right to change specifications without notice and without incurring any obligation for equipment previously or subsequently sold.