Project_____

Item No._____

Quantity_____

# MODEL 65C+ GAS FRYER

## STANDARD FRYER FEATURES & ACCESSORIES

- Tank - Stainless steel
- Cabinet - stainless front, door
- Aluminized steel sides and back
- Millivolt Thermostat (T-Stat)
- Themo-Safety pilot with built in regulator.
- High Temperature safety limit switch
- 3/4 NPT rear gas connection
- 1 ¼" (3.2 cm) Full port drain valve for fast draining
- Separate Manual gas shutoffs, for front servicing
- Integrated flue deflector
- 6" (15.2cm) adjustable legs, easier access to clean
- Tube rack, allows crumbs & debris into cool zone
- Removable basket hanger, requires no tools
- Drain Line Clean out rod
- Drain extension
- Fryer cleaner sample packet
- Choice of basket options :
  - ❑ 2-Twin Baskets
  - ❑ 1-Full Basket

## APPLICATION

For High Volume Gas single standalone frying specify Pitco Gas Model 65C+ tube fryer.

## MODELS AVAILABLE

- ❑ **65C+ (65-80 lbs, 18 x 18" fry area, 150Kbtu/hr) Natural**
- ❑ **65C+ (65-80 lbs, 18 x 18" fry area, 150Kbtu/hr) Propane**

## CONSTRUCTION

- Welded tank with a super smooth machine peened finish ensures easy cleaning.
- Long lasting, high temperature alloy stainless steel heat baffles are mounted in the heat exchanger tubes to provide maximum heating and combustion efficiency.
- Standing pilot light design provides a ready flame when heat is required.

## CONTROLS

- Integrated gas control valve acts as a manual and pilot valve, automatic pilot valve, gas filter, pressure regulator and automatic main valve.
- Gas control valve prevents gas flow to the main burner until pilot is established and shuts off all gas flow automatically if the pilot flame goes out.
- Temperature limit automatically shuts off all gas flow if the fryer temperature exceeds 450°F (232°C) ±15°F (±10°C) / 410°F (210°C) for International units.

## OPTIONS & ACCESSORIES (AT ADDITIONAL COST)

- ❑ Tank stainless steel
- ❑ Stainless Steel back
- ❑ 6" (15.2cm) adjustable rear and front locking casters
- ❑ Flexible gas hose with disconnect and restraining cable
- ❑ Tank cover
- ❑ 3-Triple Baskets

MODEL 65C+ GAS FRYER

***Pitco Frialator, Inc*** • P.O. Box 501, Concord, NH 03302-0501 • 509 Route 3A, Bow, NH 03304
603-225-6684 • FAX: 603-225-8497 • www.pitco.com

# MODEL 65C+ GAS FRYER

MODEL 65C+ GAS FRYER

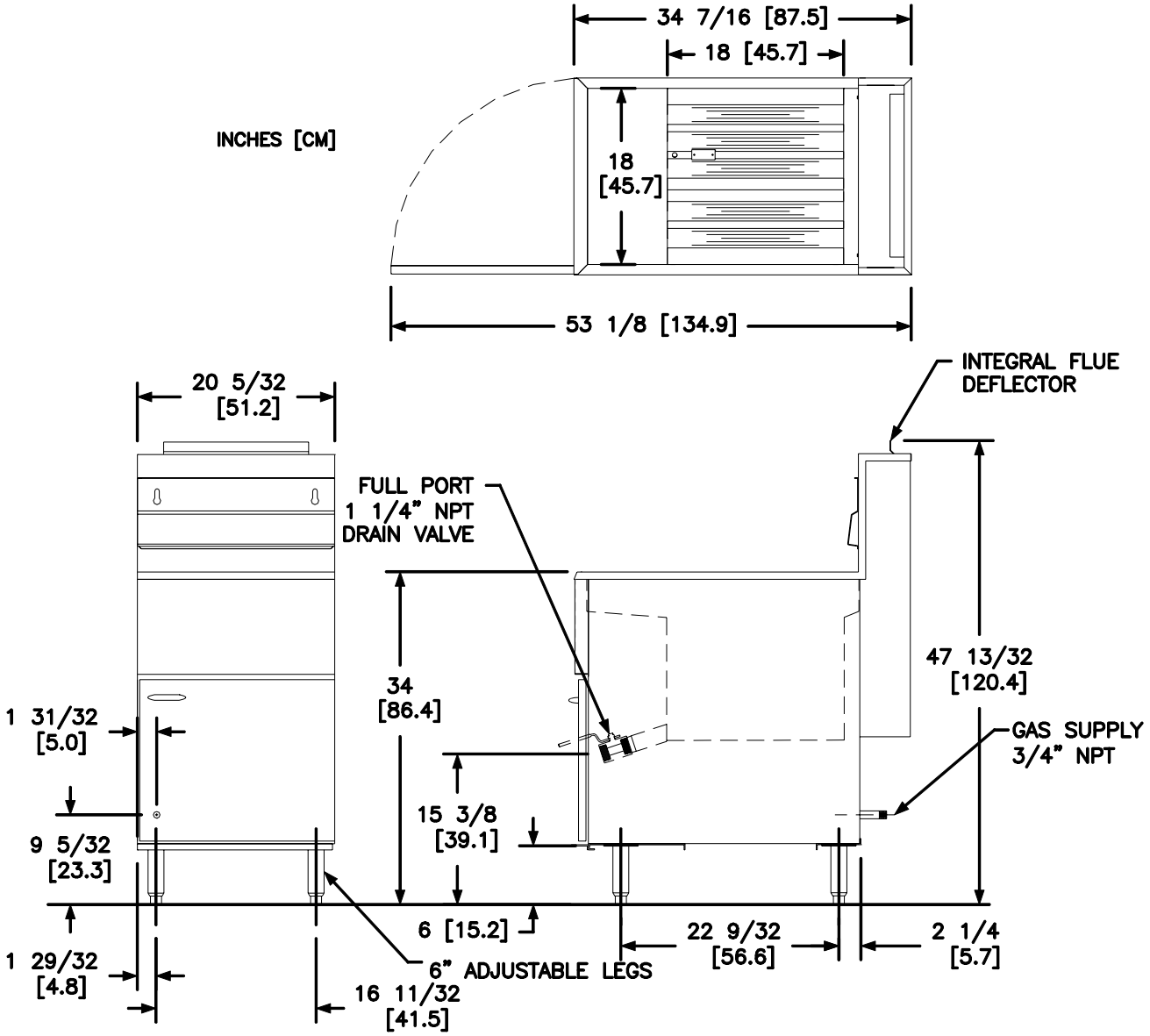


| INDIVIDUAL FRYER SPECIFICATIONS | | | |
|---|---|---|---|
| **Model** | **Frying Area** | **Cook Depth** | **Oil Capacity** |
| 65C+ | 18 x 18 in (45.7 x 45.7 cm) | 3-1/4 - 5 in (8.3 -12.7 cm) | 65-80 Lbs (29.4 - 36.3 kg) |

| FRYER SHIPPING INFORMATION (Approximate) | | | |
|---|---|---|---|
| **Model** | **Shipping Weight** | **Shipping Crate Size H x W x L** | **Shipping Cube** |
| 65C+ | 226 Lbs (103 kg) | 45 x 23 x 38 in (114.3 x 58.4 x 96.5 cm) | 22.8 $ft^3$. (0.6$m^3$ ) |

**INSTALLATION INFORMATION**

**GAS SYSTEM REQUIREMENTS**

| Gas Type | Store Supply Pressure * | Burner Manifold Pressure | * Check plumbing / gas codes for proper gas supply line sizing to sustain burner pressure when all gas appliances are full on. |
|---|---|---|---|
| Natural | 7 - 10" w.c.(17.4 mbars/ 1.7 kPa) | 4" w.c. (10 mbars / 1 kPa) | |
| Propane | 11 - 13" w.c.(27.4 mbars/ 2.7 kPa) | 10" w.c. (25mbars/2.4 kPa) | |
| Gas Input | 150,000 BTU's/Hour (44 kW) 158MJ/hr) | | |

**CLEARANCES (Do Not Curb Mount)**

| Front min. | Floor min. | Combustible material | | Non-Combustible material | | Fryer Flue Area |
|---|---|---|---|---|---|---|
| | | Sides min. | Rear min. | Sides min. | Rear min. | |
| 30" (76.2 cm) | 6" (15.25 cm) | 6" (15.2cm) | 6" (15.2cm) | 0" | 0" | Do not block / restrict flue gases from flowing into hood or install vent hood drains over the flue. |

**SHORT FORM SPECIFICATION**

Provide Pitco Gas Model tube fired high volume gas floor fryer. Fryer shall be 65-80 lbs oil capacity, 150,000 Kbtu/hr, 18" by 18" fry area, mild steel (or optional stainless) peened tank, stainless front, door, sides. Blower Free atmospheric burner system, with millivolt thermostat and thermo-safety pilot, separate gas shut off, 3/4" npt rear gas connect, recessed cabinet back, 1-1/4" Full port drain. Provide options and accessories as follows:

***Pitco Frialator, Inc*** • P.O. Box 501, Concord, NH 03302-0501 • 509 Route 3A, Bow, NH 03304
603-225-6684 • FAX: 603-225-8497 • www.pitco.com L10-327 Rev 0 02/09 Printed in the USA
We reserve the right to change specifications without notice and without incurring any obligation for equipment previously or subsequently sold.