Project _____

Item No. _____

Quantity _____

Model 24F (FF) & 34F (FF) - High Capacity Food and Fish Fryers

STANDARD ACCESSORIES

- Cabinet - stainless steel exterior
- Tank - stainless steel
- Food/Fish grid
- One drain extension
- One drain line clean-out rod
- Heat deflector
- Submerger (24FF or 34FF only)
- Drainboard (24FF or 34FF only)
- Tube screen w/handle (24FF or 34FF only)

AVAILABLE OPTIONS & ACCESSORIES

- ☐ Electric thermostat
- ☐ Covers
- ☐ Left or right side work shelf
- ☐ Top holding shelf with removable tray
- ☐ Solid state thermostat with melt cycle
- ☐ Electronic ignition*
- ☐ Front work shelf

* Only available with solid state thermostat
NOT AVAILABLE on model 24FF

STANDARD SPECIFICATIONS

CONSTRUCTION

- Welded tank with an extra smooth peened finish ensures easy cleaning.
- Long-lasting, high-temperature alloy stainless steel heat baffles are mounted in the heat exchanger tubes to provide maximum heating and combustion efficiency.
- Standing pilot light design provides a ready flame when heat is required.

CONTROLS

- Thermostat maintains selected temperature automatically between 200°F (93°C) and 400°F (204°C).
- Integrated gas control valve acts as a manual and pilot valve, automatic pilot valve, gas filter, pressure regulator, and automatic main valve.
- Gas control valve prevents gas flow to the main burner until pilot is established and shuts off all gas flow automatically if the pilot flame goes out.
- Temperature limit switch safely shuts off all gas flow if the fryer temperature exceeds the upper limit.

OPERATIONS

- Front 1-1/2” (3.2 cm) full port drain for quick draining.
- Standing pilot and thermostat maintains temperature automatically at the selected temperature (200°F (93°C) and 400°F (204°C).

APPROVALS

- CSA Certified (AGA, CGA)
- NSF Listed
- MEA Approved

Pitco Frialator, Inc., P.O. Box 501, Concord, NH 03302-0501 • 509 Route 3A, Bow NH 03304, USA
(603) 225-6684 • Fax (603) 225-8472 • *www.pitco.com*

L10-012 Rev 8 (11/07)

Model 24F (FF) & 34F (FF) - High Capacity Food and Fish Fryers

Model 24F (FF) & 34F (FF) - High Capacity Food and Fish Fryers

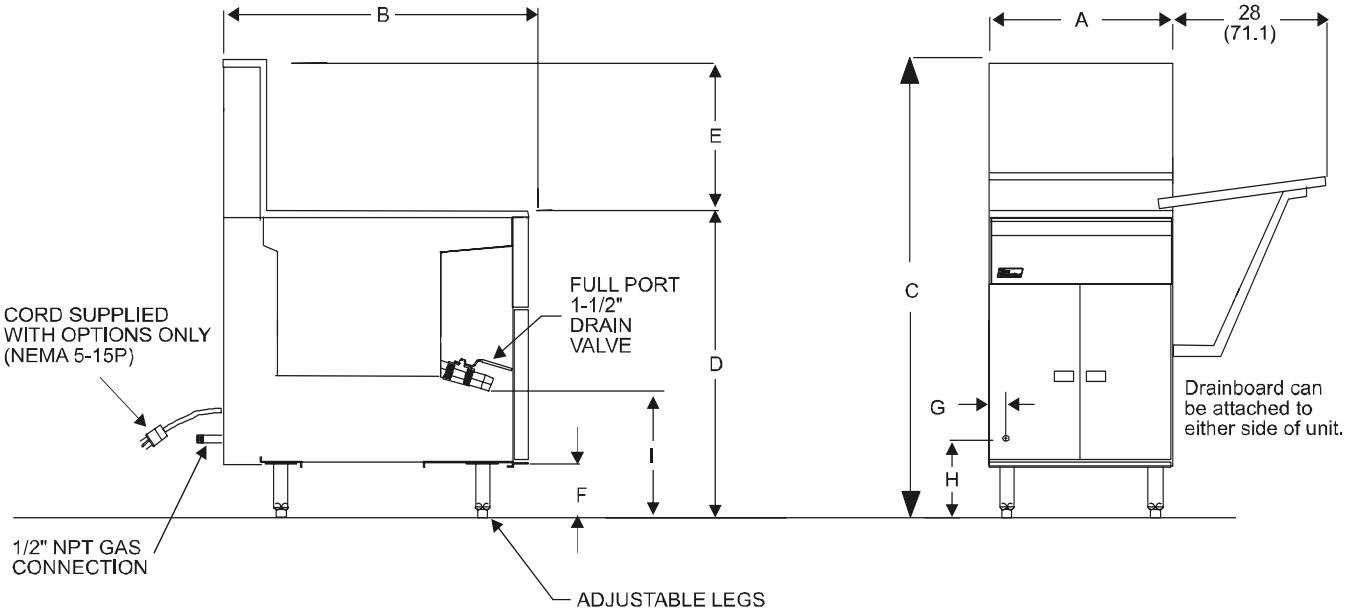

MODEL	A	B	C	D	E	F	G	H	I
24FF	29-3/8 in (74.6 cm)	43-1/4 in (109.9 cm)	57 in (144.8 cm)	34 in (86.4 cm)	23 in (58.4 cm)	6 in (15.2 cm)	8 in (20.3 cm)	11 in (27.9 cm)	15-15/16 (40.5cm)
24F	29-3/8 in (74.6 cm)	43-1/4 in (109.9 cm)	46 in (116.8 cm)	34 in (86.4 cm)	12 in (30.5 cm)	6 in (15.2 cm)	8 in (20.3 cm)	11 in (27.9 cm)	15-15/16 (40.5cm)
34FF	37-3/8 in (94.9 cm)	43-3/4 in (111.1 cm)	57 in (144.8 cm)	34 in (86.4 cm)	23 in (58.4 cm)	6 in (15.2 cm)	8 in (20.3 cm)	11 in (27.9 cm)	15-15/16 (40.5cm)
34F	37-3/8 in (94.9 cm)	43-3/4 in (111.1 cm)	46 in (116.8 cm)	34 in (86.4 cm)	12 in (30.5 cm)	6 in (15.2 cm)	8 in (20.3 cm)	11 in (27.9 cm)	15-15/16 (40.5cm)

ELECTRICAL

Option	VOLTAGE/PHASE/HZ 120/1/60 AMPS/EA	VOLTAGE/PHASE/HZ 240/1/50 AMPS/EA
GAS-MECHANICAL TSTAT	0.0	0.0
SOLID STATE TSTAT & MELT	0.5	0.25
ELECTRIC THERMOSTAT	0.5	0.25
ELECTRONIC IGNITION *	NO ADDITIONAL AMPS	

NOTE - Add current ratings together for options selected, electrical options require cord.

* NOT AVAILABLE ON MODEL 24FF

GAS CONSUMPTION

Model 24F (FF) 150,000 BTU's/Hour (37,800 KCal)

Model 34F (FF) 190,000 BTU's/Hour (47,800 KCal)

Available in Natural or Propane gas. For other fuel types, contact your Dealer/Distributor.

PERFORMANCE CHARACTERISTICS

24F (FF)

Cooks 90 pounds of chicken per hour

Frying Area 24" x 24" x 4-1/4" (61 cm x 61 cm x 10.8 cm)

34F (FF)

Cooks 150 pounds of chicken per hour

Frying Area 24" x 34" x 4-1/4" (61 cm x 86.4 cm x 10.8 cm)

OIL CAPACITY & SHIPPING INFORMATION

MODEL	Oil Capacity	Shipping Information
24F (FF)	150-170 lbs (68.1-77.1 Kg)	400 lbs (181.4 Kg) 45 cu. ft. (1.27 cu. meters)
34F (FF)	210-235 lbs (95.2-106.6 Kg)	490 lbs (222 Kg) 69 cu. ft. (1.95 cu. meters)

SHORT FORM SPECIFICATION

Provide Pitco Model 24F (FF) or 34F (FF) tube fired gas fryer. Fryer shall have an atmospheric burner system combined with stainless steel heat tubes utilizing high temperature alloy stainless steel baffles. Fryer shall have a deep cool zone; minimum 20% of total oil capacity to trap burnt particles, crumbs and black specks. Provide accessories as follows:

TYPICAL APPLICATION

Frying a wide variety of foods. Frying that requires large load capacity and high volume production rate.

Pitco Frialator, Inc., P.O. Box 501, Concord, NH 03302-0501 •509 Route 3A, Bow NH 03304, USA
Phone • (603) 225-6684 • Fax (603) 225-8472 • *www.pitco.com*

L10-012 Rev 8 (11/07) *Specifications subject to change without notice.* Printed in the USA