Project_____
Item No._____
Quantity_____

# Model SSPG14, SSRS14
# Solstice Supreme Pasta Gas Cooker and Rinse

**Model SSPG14/SSRS14**
**Shown with option: Single Basket Lift**

## STANDARD FEATURES & ACCESSORIES

- Marine grade stainless steel tank
- Stainless steel exterior cabinet
- Solstice Burner Technology, No blower or ceramics
- High Efficiency design
- Self Cleaning Burner & Down Draft Protection
- Digital Controller with 4 button Timer
- Drain "T" manifold standard on SSPG14 cooker/SSRS14 rinse station.
- Faucet on Rinse
- Manual Water Fill
- Tank overflow
- Tank overflow screen
- Drain screen
- Drain clean out rod
- Tube rack (cooker)
- Removable basket hanger
- Cleaner sample packet
- 9" (22.9 cm) adjustable legs, easier to clean

## STANDARD SPECIFICATIONS

For Energy Saving High Production Pasta Cooker specify Pitco Model SSPG14 tube fired gas Pasta cooker with Solstice Supreme Burner Technology which provides very dependable atmospheric heat transfer and fuel saving performance without the need for complex power blowers. This patented atmospheric burner system with its long lasting alloy heat baffles delivers lower flue temperatures. New Self Clean Burner (patent pending) goes through a daily 30 second cleaning cycle to keep your burners tuned to operate in the most energy efficient manner. Ventilation troubles are virtually eliminated with the Down Draft Protection (patent pending) that safely monitors your pasta cooker, making this a low maintenance, highly reliable pasta cooker. High volume restaurants and multi-store chains can benefit from lower operational energy cost and lower annual maintenance and repair cost.

## CONSTRUCTION

- Marine grade stainless steel tank on cooker and rinse station.
- Welded tank with an extra smooth peened finish ensures easy cleaning.
- Cabinet exterior constructed of stainless steel
- 1-1/4" (3.2 cm) Full port opening drain valve
- Tank overflow prevents the water from flowing over the side of the tank and onto the floor.

## CONTROLS

- Digital Controller with precise temperature regulation for boil and simmer modes.
- Built in Countdown timer is capable of storing 4 menu items on controller.
- Integrated BOIL/SIMMER switch allows you to easily select the desired cooking mode.
- Controller has an audible high temp alarm.
- Temperature limit switch safely shuts off all heat if the upper temperature limit is exceeded.
- Integrated Gas Valve for Safe Operation

## OPTIONS & ACCESSORIES
**(AT ADDITIONAL COST)**

- ❑ Digital Control with 2 Button count down timer (no preset cook times)
- ❑ Regulated Mixing Valve (Includes unregulated and regulated flow knobs)
- ❑ Basket Lifts (Single or Dual)
- ❑ Rinse Tank Insulation
- ❑ 9" casters (22.9 cm)
- ❑ Small Bulk Pasta Basket Fine Mesh
- ❑ Large Bulk Pasta Basket Fine Mesh
- ❑ Oblong Basket
- ❑ 9 Individual Serving Baskets with Rack
- ❑ 6-1/4" Round Basket
- ❑ 4-7/8" Round Basket
- ❑ 4-7/8" Round Basket Fine Mesh



***Pitco Frialator, Inc*** • P.O. Box 501, Concord, NH 03302-0501 • 509 Route 3A, Bow, NH 03304
603-225-6684 • FAX: 603-225-8497 • www.pitco.com

L10-330 Rev 1 08/11 Printed in the USA

# Model SSPG14, SSRS14 Solstice Supreme Pasta Gas Cooker and Rinse

Model SSPG14, SSRS14 Solstice Supreme Pasta Gas Cooker and Rinse

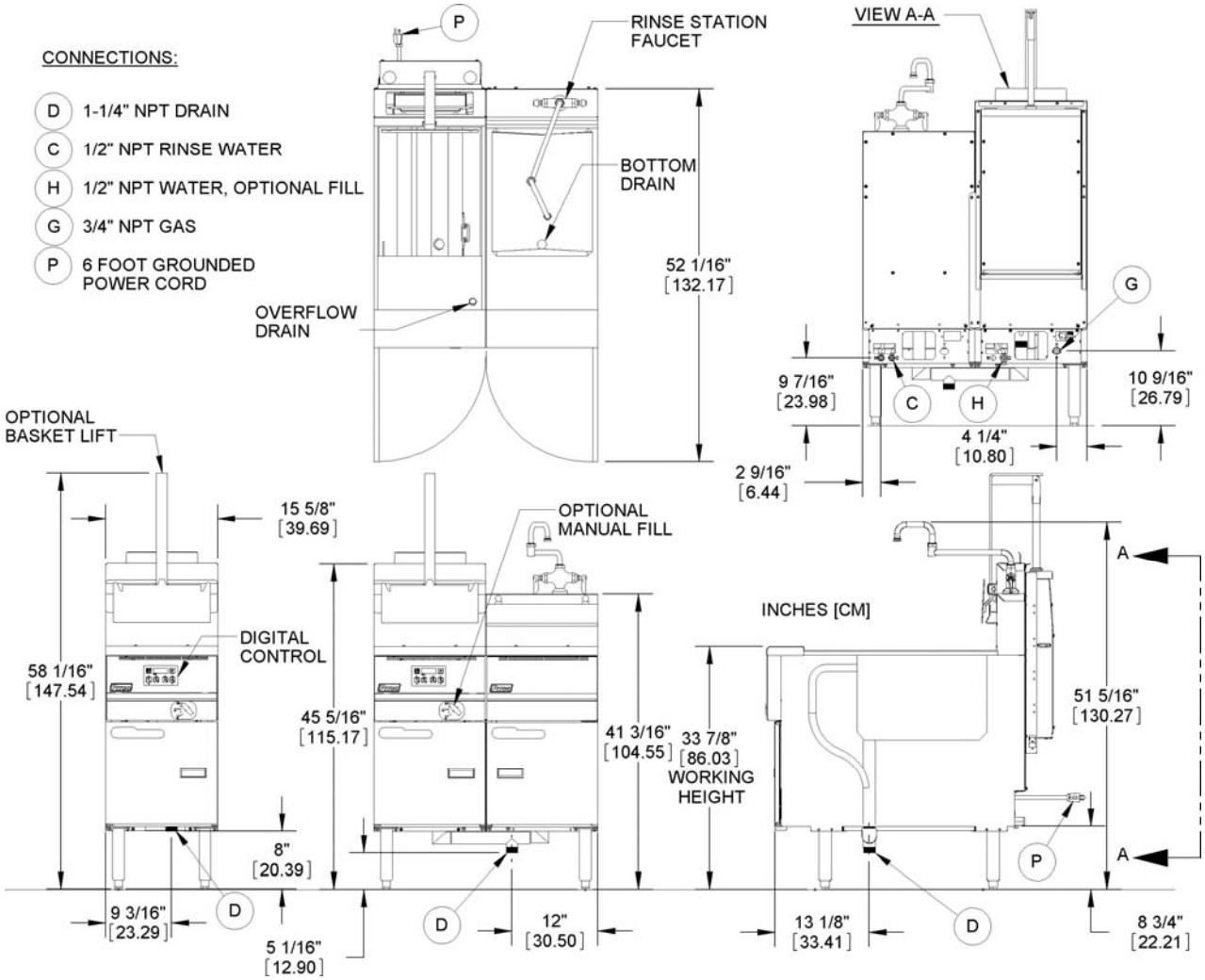


| INDIVIDUAL GAS PASTA and RINSE STATION SPECIFICATIONS | | | | | | |
|---|---|---|---|---|---|---|
| **Models** | **Cooking Area** | **Cook Depth** | **Water Capacity** | **Gas Input Rate / Hr** | **Burner Pressure** | |
| | | | | | **Nat** | **LP** |
| SSPG14 (Cooker) | 14 x 18 in (35.6 x 47.7 cm) | 11-1/4 in (28.6 cm) | 12 gal (45.5 liters) | 60,000 BTUs (17.5kW)(63.3MJ) | 4" W.C. | 10" W.C. |
| SSRS14 (Rinse) | 14 x 18 in (35.6 x 47.7 cm) | 8-1/2 in (21.6 cm) | 10 gal (37.85 liters) | N/A | N/A | N/A |

| GAS PASTA COOKER and RINSE STATION SHIPPING INFORMATION (Approximate) | | | | |
|---|---|---|---|---|
| **Model** | **Shipping Weight** | **Add for Lifts** | **Shipping Crate Size H x W x L** | **Shipping Cube** |
| SSPG14 | 250 Lbs (113.4 kg) | 35 lbs (16 kg) | 59 x 23 x 44 in (149.8 x 58.4 x 111.7 cm) | 34.6 $ft^3$. ($1.0m^3$) |
| SSPG14/SSRS14 | 376 Lbs (170 kg) | 35 lbs (16 kg) | 56 x 35.5 x 46.5 in (142.2 x 90.1 x 118.1 cm) | 53.5 $ft^3$. ($1.5m^3$) |
| SSRS14 (Rinse) | 136 Lbs (61.7 kg) | N/A | 59 x 23 x 44 in (149.8 x 58.4 x 111.7 cm) | 34.6 $ft^3$. ($1.0m^3$) |

| INSTALLATION INFORMATION | | | | | |
|---|---|---|---|---|---|
| **GAS SYSTEM REQUIREMENTS** | | | **ELECTRIC SYSTEM REQUIREMENTS** | | |
| | **Natural Gas** | **LP Gas** | | **115V 60Hz** | **208 / 220-240V 50-60 hz** |
| **Supply Pressure *** | 7 - 10" W.C. (17.4 mbars/ 1.74 kPa) | 11 - 13" W.C. (27.4 mbars/ 2.74 kPa) | **Pasta Cord Amps** | 1.0 | 0.5 |
| **Total Gas Load / Hr** | 60,000 BTUs (17.5kW)(63.3MJ) | | | | |

* Check plumbing / gas codes for proper gas supply line sizing to sustain burner pressure when all gas appliances are full on.

| CLEARANCES | | | | | | |
|---|---|---|---|---|---|---|
| **Front min.** | **Floor min.** | **Combustible material** | | **Non-Combustible material** | | **Fryer Flue Area** |
| | | **Sides min.** | **Rear min.** | **Sides min.** | **Rear min.** | |
| 30" (76.2 cm) | 6" (15.25 cm) | 6" (15.2cm) | 6" (15.2cm) | 0" | 0" | Do not block / restrict flue gases from flowing into hood or install vent hood drains over the flue. |

**SHORT FORM SPECIFICATIONS**

Provide Pitco Model SSPG14 Gas Pasta Cooker or SSPG14/SSRS14 Gas Pasta Cooker and Rinse Station with faucet. Cooking unit shall use a digital controller to boil water for cooking pasta and to maintain precise simmer temperatures for rethermalizing. Provide the ability to set electronic timer in minutes and seconds for 4 menu times using 4 product keys. The tank shall be constructed of marine grade stainless steel with tank overflows and hold 12 gallons (45.4 liters) of water with bottom 1 1/4"- (3.2cm) full port drain. The rinse tank shall be constructed of marine grade stainless steel with tank overflows and hold 10 gallons (37.85 liters) of water with bottom 1 1/4"-(3.2cm) full port drain. Entire cabinet exterior shall be constructed of stainless steel. Provide accessories as follows:

**TYPICAL APPLICATION**

High production of dry and cooked pasta for individual and bulk preparation where space is a premium. The cooker is versatile in cooking a wide variety of pasta. The simmer mode is used to gently rethermalize cooked pasta or precooked foods prior to plating or pan sauteing.

***Pitco Frialator, Inc*** • P.O. Box 501, Concord, NH 03302-0501 • 509 Route 3A, Bow, NH 03304
603-225-6684 • FAX: 603-225-8497 • www.pitco.com L10-330 Rev 1 08/11 Printed in the USA

We reserve the right to change specifications without notice and without incurring any obligation for equipment previously or subsequently sold.