Model CRTE Electric, Countertop Rethermalizer

Project _____

Item No. _____

Quantity _____

STANDARD SPECIFICATIONS

CONSTRUCTION

- Stainless steel cabinet.
- Marine grade 316 stainless steel tank.
- Quick disconnect drain fitting.
- Integrated drain screen to prevent clogging.

CONTROLS

- ON/OFF/RESET switch.
- Digital control with temperature display.
- Manual reset, high temperature protection. If the unit runs out of water and the tank overheats, the heating circuit is disabled until the ON/OFF/RESET switch is pressed to RESET.

STANDARD ACCESSORIES

- Display controller with temperature display
- Drain hose with shut off valve
- Four (4) product racks
- Stainless steel tank and cabinet
- Power cord supplied; choice of plug:
  - ☐ Shrouded twist lock (NEMA L6-30P)
  - ☐ Twist lock (NEMA L6-30P)
  - ☐ Pin and sleeve
  - ☐ 90° straight blade (NEMA 6-30P)
- 24 volt receptacle and mounting pins for product timer

  Note: NCC product timer not supplied by Pitco

OPERATIONS

- Tank holds six (6) gallons (22.7 liters) of water.
- Automatic temperature control.
- Rethermalizes prepared packaged foods.

APPROVALS

- NSF Listed (24100-0008-000)
- CUL Approved (KNGT-&, 55456)
- UL Listed (E55456)

Pitco Frialator, Inc., P.O. Box 501, Concord, NH 03302-0501 • 509 Route 3A, Bow NH 03304, USA
(603) 225-6684 • Fax (603) 225-8472 • *www.pitco.com*

L10-132 Rev 6 (01/08)

Model CRTE Electric, Countertop Rethermalizer

Model CRTE Electric, Countertop Rethermalizer

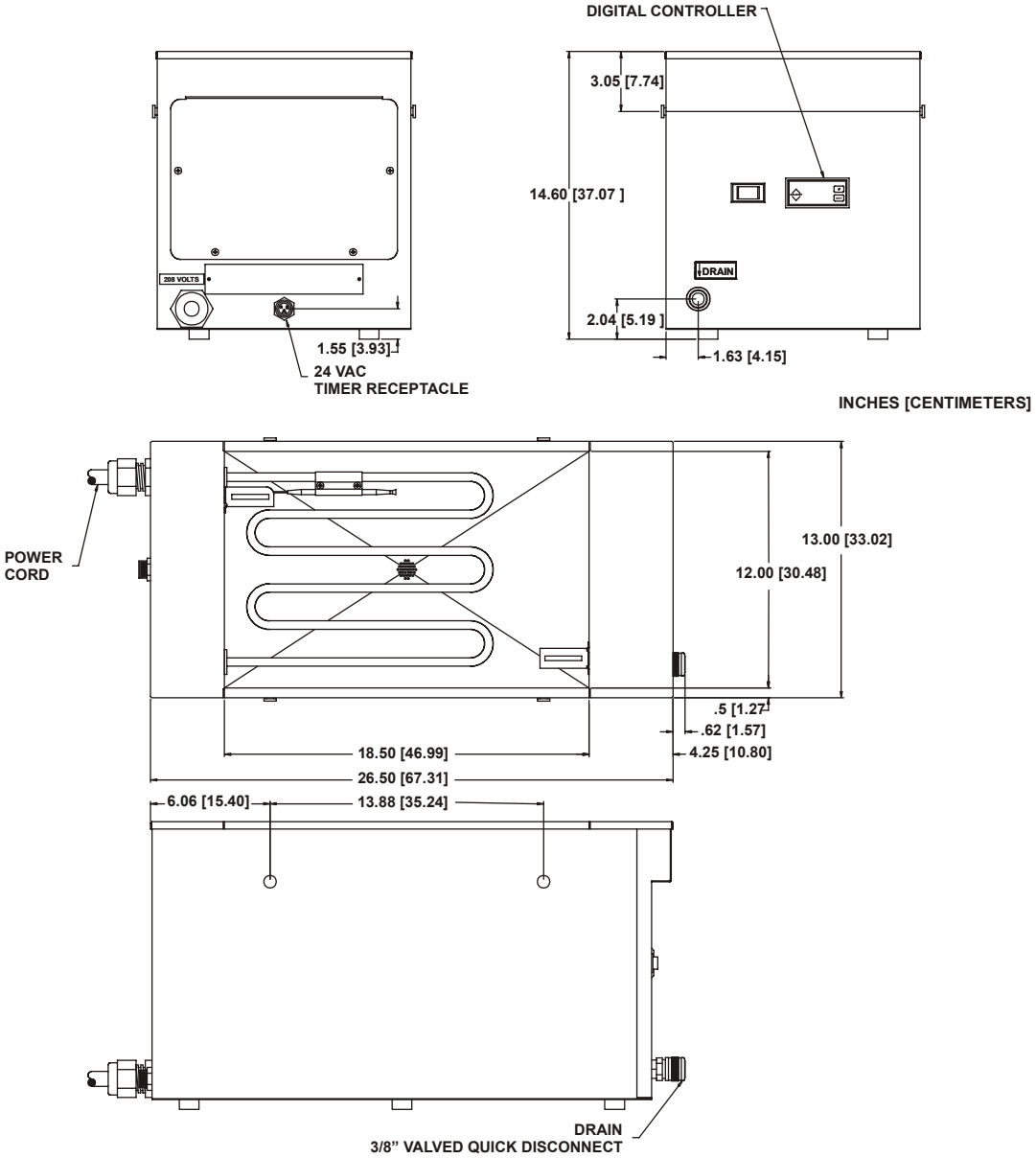

ELECTRIC COUNTERTOP RETHERMALIZER			
ELECTRIC		WATER CAPACITY	COOK DEPTH
VOLTAGE/HZ/PHASE	AMPS/EA	6 Gallons (22.7 liters)	8 1/2" (22 cm)
208/60/1	28.8		
SHIPPING INFORMATION (Approximate)			
60 pounds (27.2 kg)/6.3 cubic feet (0.18 cubic meters)			
ELECTRIC INPUT	PERFORMANCE CHARACTERISTICS		
6kW	Rethermalizes prepared packaged food.		
SHORT FORM SPECIFICATION			
Provide Pitco Model CRTE Electric Countertop Rethermalizer. Unit shall have the ability to heat water and maintain thermostatically controlled temperature. Tank shall be constructed of type 316 stainless steel and hold 6 gallons (22.7 liters) of water with front drain. Entire cabinet shall be constructed of stainless steel. Provide accessories as follows:			
TYPICAL APPLICATION			
Typical Application-Rethermalizing pre-cooked/packaged food products.			

Pitco Frialator, Inc., P.O. Box 501, Concord, NH 03302-0501 • 509 Route 3A, Bow NH 03304, USA
(603) 225-6684 • Fax (603) 225-8472 • *www.pitco.com*

L10-132 Rev 6 (01/08)
Printed in the USA