Food Warmers
Mix-N-Serve™ Butter Dispenser

Model MNS

Date: Project: Quantity: Item Number:

MNS #05550

NSF c UL US LISTED

Bid Description

The new Mix-N-Serve™ is designed for serving butter, hot chocolate and other similar products that separate. It's constructed of stainless steel and black ABS plastic. To keep product uniform throughout the day, a magnetic agitator continuously stirs.

The adjustable thermostat holds product up to 170°F (77°C) and locks to prevent accidental changes. A 400 watt heating element heats product evenly without burning or scorching. Two ON/OFF lighted rocker switches control the heating element and stir mechanism.

The Mix-N-Serve™ includes a melting basket and removable six-quart (5.7-L) stainless steel food vessel. Product is dispensed from a heavy duty, spigot style faucet.

Standard Features

Durable stainless steel and plastic construction

Six-quart (5.7-L) capacity

Removable food vessel for easy cleanup

Thermostat lock prevents accidental temperature changes

Magnetic agitator keeps product from separating

Independent control of heat and stir features

Warranty

Server Products equipment is backed by a two-year limited warranty against defects in materials and workmanship. For a copy of our complete warranty statement, see our Website or contact us.

Specifications on reverse side

Food Warmers
Mix-N-Serve™ Butter Dispenser

Model MNS

Mix-N-Serve™

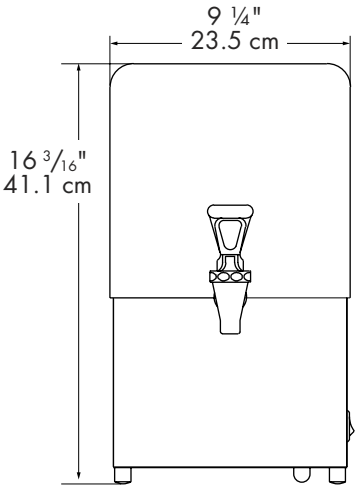

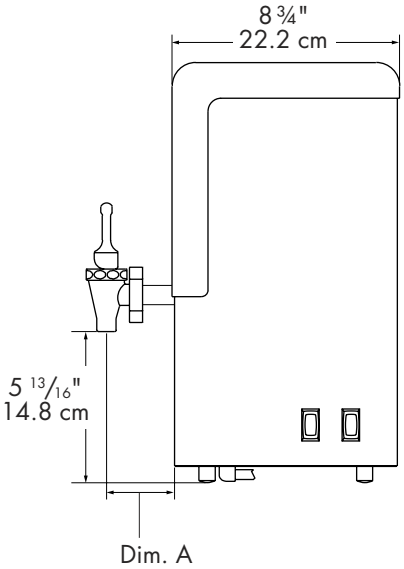

Specifications

Model	MNS #05550			
Construction	Stainless steel and black ABS plastic unit includes removable stainless steel food vessel.			
Capacity	6-quart (5.7-L)			
Dimensions	Height	Width	Depth	Dim. A
in	16 3/16	9 ¼	8 ¾	2 5/8
cm	41.1	23.5	22.2	6.7
Electrical	120V, 60Hz, 450W, 3.8A 72 in (183 cm) cord set NEMA 5-15P, 15A, 125V PLUG			
Ship Weight	18 lb (8.2 kg)			

FOB Richfield, Wisconsin 53076

CAD Library

We are a member of The KCL CADalog with more than 100 other manufacturers. Our CAD files can be purchased through Kochman Consultants, Ltd. at 847-470-1195, or e-mail sales@kclcad.com. Their Web site is at www.kclcad.com.

Server Products, Inc. • P.O. Box 98 • Richfield, WI 53076 • Toll Free: 800-558-8722
P: 262-628-5600 • F: 262-628-5110 • spsales@server-products.com • www.server-products.com
Server Products, Inc. reserves the right to modify specifications without obligation. Printed in USA
5.2005/6M Stock #02077