SERVICE MANUAL

Hot Food Tables
Cold Food Tables
Utility Tables

Model	Description	Volts	Watts
38002	2-Well Hot Food Table	120V	960 Watts
38003	3-Well Hot Food Table	120V	1440 Watts
38004	4-Well Hot Food Table	120V	1920 Watts
38005	5-Well Hot Food Table	120V	2400 Watts
38102	2-Well Hot Food Table	120V	1400 Watts
38103	3-Well Hot Food Table	120V	2100 Watts
38104	4-Well Hot Food Table	120V	2800 Watts
38105	5-Well Hot Food Table	120V	3500 Watts
38106	2-Well Hot Food Table	208V	1400 Watts
38107	3-Well Hot Food Table	208V	2100 Watts
38108	4-Well Hot Food Table	208V	2800 Watts
38109	5-Well Hot Food Table	208V	3500 Watts
38116	2-Well Hot Food Table	240V	1600 Watts
38117	3-Well Hot Food Table	240V	2400 Watts
38118	4-Well Hot Food Table	240V	3200 Watts
38119	5-Well Hot Food Table	240V	4000 Watts

NOTE: WARNING FIRE HAZARD Do not operate this equipment without posts, shelf and legs or casters properly installed. The heating compartment must be separated from the supporting surface of the unit.

TABLE OF CONTENTS PAGE

Operating and Safety Instructions 2

Troubleshooting 5

Exploded View 6

Wiring Diagram 7

Warranty 8

Item No. 21609-1 en Rev. 11/09

ASSEMBLY INSTRUCTIONS

Note: Place cardboard or drop cloth on floor to protect work surface of unit during assembly.

HOT FOOD TABLES

1. Remove all components from shipping container.

2. Place base assembly on floor with well openings down and bottom pan facing up.

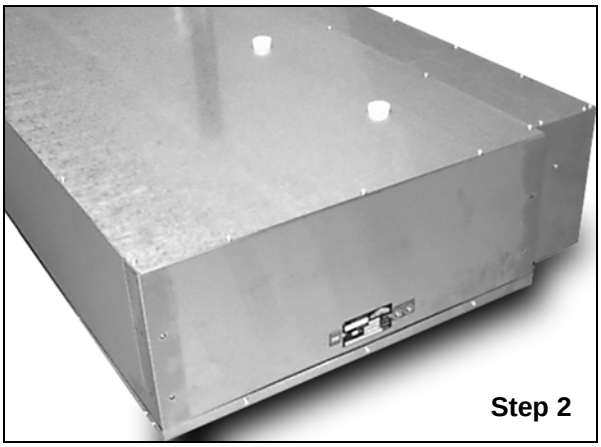

3. Assemble drain shut-off faucets to tailpiece below each well. These should be hand tightened until snug. **Do not use Teflon tape or any tools when assembling. Use of tools will cause cracking of the drain assembly resulting in water leaks.**

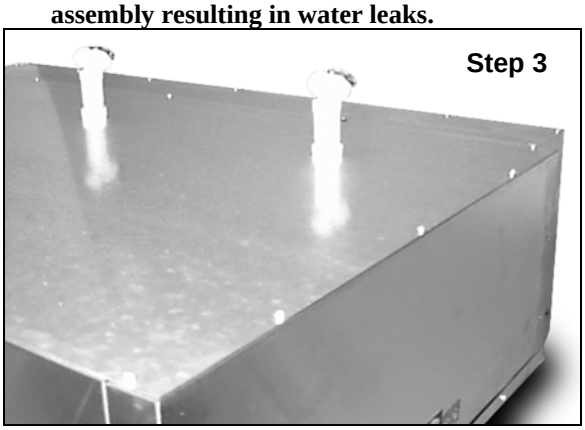

4. Attach four legs to base using 16 screws (4 screws per leg). The nuts for these screws are permanently attached inside the base.

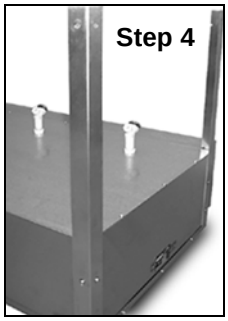

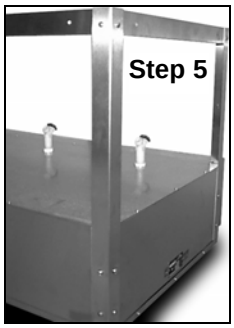

5. Attach the bottom shelf using 8 screws. Remember to face top of shelf toward bottom of base.

6. Assemble each of the four stationary peg legs to the four triangular peg leg mounting plates using locknuts. Nuts are permanently attached inside the plates.

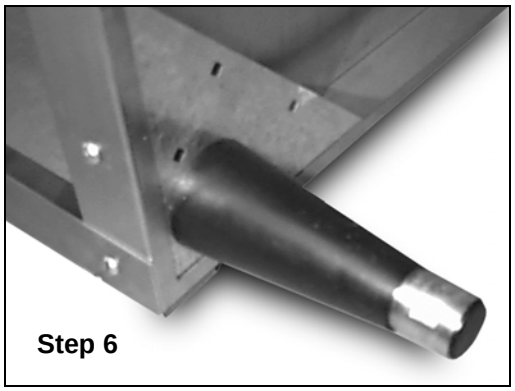

7. Lift unit and place on legs.

8. Place cutting board on top of work surface

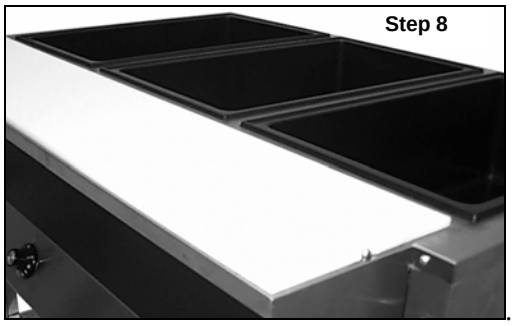

COLD FOOD TABLES

Follow steps 1, 2, 4, 5, 6 and 7.

UTILITY TABLES

Follow steps 1, 2, 4, 5, 6 and 7.

ASSEMBLY PARTS LIST

Each Vollrath ServeWell® unit is packed with the following assembly parts:

Description	Part Number	Quantity
Legs	28702-2516	4
Stationary Peg Legs	23433-1058	4
Screws	26570-1058	32
Shut-off Faucet	23424	1 per well

Note: Each ServeWell® unit will also have the appropriate bottom shelf included. Poly cutting boards will be packed with the hot food servers. Hot well servers will have only one drain faucet (#23424) for each well.

HOT FOOD TABLES

Thank you for purchasing this Vollrath ServeWell® food warmer. Before operating this unit, read and familiarize yourself with the following operating and safety instructions. SAVE THESE INSTRUCTIONS FOR FUTURE REFERENCE.

WARNING

Electric shock, fire or burn injuries can occur if this equipment is not used properly. To reduce risk of injury:

- **Plug only into grounded electrical outlets matching the nameplate rated voltage.**
- **Unit should only be used in flat, level position.**
- **Unplug hot units and let cool before cleaning or moving.**
- **Do not spray controls or outside of unit with liquids or cleaning agents.**
- **Handle hot water carefully.**

Do not operate unattended.

IMPORTANT: Do not operate this unit without water in wells.

IMPORTANT: Do not operate this equipment without posts, shelf and legs or casters properly installed. The heating compartment must be separated from the supporting surface of the unit.

FUNCTION AND PURPOSE

This unit is intended to hold containers of hot food at proper serving temperature. This unit is not designed or intended to cook raw food or reheat prepared food.

OPERATION

1. Place the food warmer unit on a flat, stable surface.
2. Fill each well with the following amount of water:

Model	Amount of Water
All models	4 Quarts

The water level mark inside the wells is at approximately 4 Quarts. Do not overfill wells. Do not operate wells without water.

WARNING

ELECTRICAL SHOCK HAZARD
Keep water level at or below the required level. If level is too high, water may overflow when the food container is inserted. The overflow could enter the electrical compartment and cause a short circuit or electric shock.

3. Plug power cord into electrical outlet with nameplate rated voltage.
4. Preheat the water in wells by covering wells with empty food containers or covers, and then setting the heat control to the maximum heat setting. Preheat times:

Model	Preheat Time
All models	60 minutes

5. Place containers of hot food into the preheated food warmer wells. To prevent spills, do not overfill the food containers.
6. Set heat control to maintain safe food holding temperature. Monitor food temperatures closely for food safety. (See food safety note.)

FOOD SAFETY PRECAUTIONARY NOTE

Monitor food temperatures closely for food safety. The United States Public Health Service recommends that hot food be held at a minimum of 140° F (60° C) to help prevent bacteria growth. Maintain water level at approximately 3/8” from bottom of well. Periodically (approx. 2 hours) remove container of food and check the water level. Add hot water if needed.

WARNING

BURN HAZARD
Hot water and steam in the well can burn skin. Use protective gloves, mitts or potholders when removing food containers or covers. Hot food can also cause burns. Handle hot food carefully

CLEANING

To maintain appearance and increase the service life, the food warmer should be cleaned at least daily.

1. Before cleaning or moving, unplug the unit and let it cool completely.
2. Carefully drain water from wells.
3. Wipe the entire interior of each water pan and well with clean, damp cloth.
4. To avoid damaging the finish, do not use abrasive materials, scratching cleaners or scouring pads to clean water deposits from the wells.
5. If soap or chemical cleaners are used, be sure they are completely rinsed away with clear water, immediately after cleansing. Chemical residue could corrode the surface of the unit.

WARNING

ELECTRICAL SHOCK HAZARD
Do not spray water or cleaning product. Liquid could enter the electrical compartment and cause a short circuit or electric shock.

REPAIR

There are no user serviceable parts within this appliance. To avoid serious injury or damage, never attempt to repair the food warmer or replace a damaged power cord yourself.

Contact a competent professional repair service.

WARNING

ELECTRICAL SHOCK HAZARD
Do not use this equipment if any well has been removed. Contact with any metal part could cause an electrical shock resulting in severe injury or death.

NON-REFRIGERATED COLD FOOD TABLES

FUNCTION AND PURPOSE

This non-refrigerated cold food table is intended to be used with ice and hold containers of cold food. It is not designed to lower the temperature of raw or prepared food product.

Note: The ability to maintain holding temperatures of 40°F or below is influenced by factors that include ambient air temperature, amount of ice, and length of time the food product is held.

OPERATION

1. Partially fill the well with crushed, shaved or cube ice. Position food containers in the well and complete filling the well with ice. Food product should not extend above the level of the ice. If it does, the top layer of the food product will warm rapidly and exceed maximum holding temperature.

WARNING

HEALTH HAZARD
Ice used to hold product is designated as used in a food contact zone. It is subject to food spills and contamination and MUST NOT be used for human consumption.

2. Monitor the food temperature frequently for food safety. The United States Public Heath Service recommends that potentially hazardous food be held at 41° F (5° C) or below to help prevent bacteria growth. If safe temperature levels are exceeded, replace the food product with properly chilled food.
3. The recommended maximum depth food pan or container is four inches. This will allow ice to be placed below the pan to aid temperature maintenance.
4. Add ice as needed. Drain excess water.

CLEANING

1. Remove all food product containers from well. Remove any food product that has been spilled on the ice. Discard spilled food product.
2. Place a bucket under the drain and allow the water to flow into the container. Warm water may be poured over the ice to shorten melting time.
3. Wipe interior of well and all surface areas to remove remaining water and food spills.
4. If soap or chemical cleaners are used to clean the metal surfaces, be sure they are completely rinsed away with a clean damp cloth or sponge. Chemical residue may corrode the surface of the cold food table.

UTILITY TABLES

FUNCTION AND PURPOSE

This utility table is intended to hold non-perishable food products or supplies. It is NOT to be used for the holding or serving of food items that require temperature maintenance for safe consumption.

CLEANING

1. Wipe all surfaces with a clean, damp cloth.
2. If soap or chemical cleaners are used to clean the metal surfaces, be sure they are completely rinsed away with a clean damp cloth or sponge. Chemical residue may corrode the surface of the utility table.

TROUBLESHOOTING GUIDE

Symptom	Probable Cause
One well does not get as hot as all the others.	Thermostats could be out of calibration. To test, when the unit is cold, turn the thermostat from the off position slowly to full on. You should hear a "click" at about the second or third position. If the click is heard much later, the thermostats are out of calibration and must be replaced. Knocking the thermostats can cause them to be thrown out of calibration.
Elements burn out after a short time.	Check voltage. 208V units are not designed to operate on 240V. Check the power supply. Operators often plug 120V 5-30 and 5-50 plugs into 208V or 240V receptacles. Elements must always be covered with water. If the unit is used without water, the elements will burn out prematurely.
Drains leak.	Check for obstructions preventing the valve to close properly. Plastic drain adapter is cracked where brass reducer or valve is screwed into drain adapter. The drain parts should be hand tightened only. Teflon tape should not be used when installing drain valves. Over-tightening the drain parts will crack the plastic.
Unit heats when thermostat dial is in off position.	Thermostat is wired wrong. Wires should be on terminals 1 and 2. Thermostat is damaged and must be replaced.
Unit does not get hot enough.	Too much water. 480 Watt units should only have 2 Quarts of water and must be preheated with a cover for 1 hour. Check to see the unit has the proper voltage. A unit requiring 120V supply will not perform properly if the voltage supplied is low.

EXPLODED VIEW

This unit shown is a three well unit. The two, four and five well units use the same parts, except where noted.

Element Part Numbers		
For Model #	**Voltage**	**Use Part #**
38002, 38003, 38004, 38005	120 Volt	44200-1
38102, 38103, 38104, 38105	120 Volt	44204-1
38106, 38107, 38108, 38109	208 Volt Only	44227-1
38116, 38117, 38118, 38119	208/240 Volt	44277-1
Poly Cutting Board Part Numbers		
For Model #		**Use Part #**
38002, 38102, 38106, 38116	2-Well Units	23428-1
38003, 38103, 38107, 38117	3-Well Units	23429-1
38004, 38104, 38108, 38118	4-Well Units	23431-1
38005, 38105, 38109, 38119	5-Well Units	23432-1
Bottom Shelf Part Number		
For Model #		**Use Part #**
38002, 38102, 38106, 38116	2-Well Units	28747-2
38003, 38103, 38107, 38117	3-Well Units	28704-2
38004, 38104, 38108, 38118	4-Well Units	28729-2
38005, 38105, 38109, 38119	5-Well Units	28715-2

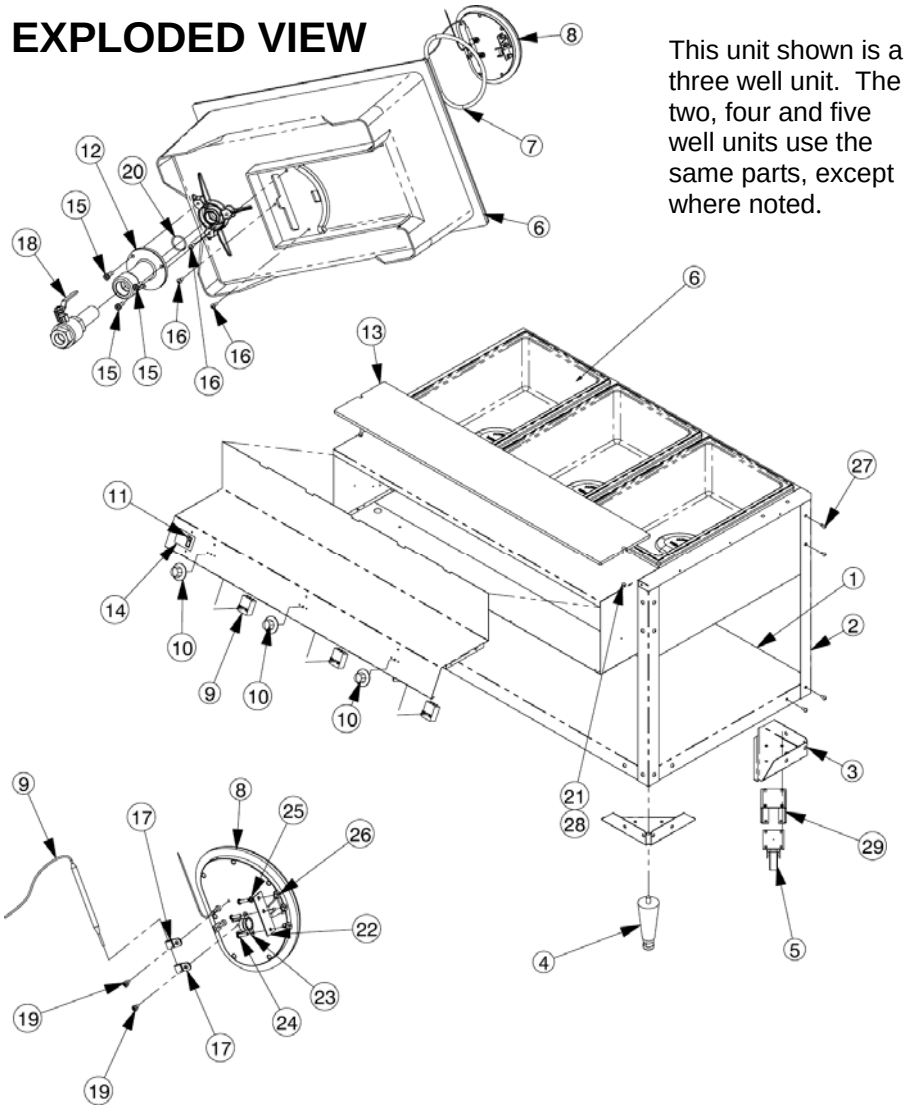

Item No.	Part No.	Description	Item No.	Part No.	Description
1	See Shelf Chart	Shelf, bottom	18	23424-2	Valve and nipple assembly
2	28702-1	Upright leg	19	17496-3	Screw, #6-32 x .250 Lg.
3	28707-2	Bracket, caster	20	17365-3	O-Ring adapter, drain
4	23433-1	Leg, adjustable	21	17236-3	Nut, acorn #10-24
5	29838-1	Caster - 4″ swivel (optional)	22	44459-2	Bracket, high limit switch
6	17533-1	Well, plastic (Mfg. After 7/1/00)	23	17504-3	Element Switch, 347°F +/- 16°F (175 °C)
6	17532-1	Well, plastic (Mfg. Before 7/1/00)	24	17020-3	Screw, #6-32 x .500 Lg.
7	17868-1	O-ring, element	25	25181-3	Washer, lock - #6 internal tooth
8	See Element Chart	Element	26	17019-3	#6-32 keps nut
9	17124-1	Thermostat	27	26530-3	Screw, #1/4-20 x .500
10	23423-1	Knob, thermostat	28	17117-1	Screw, #10-32 x .25 Lg.
11	23540-1	Switch, toggle. DPST, 30A	29	28799-2	Spacer, with optional caster
12	17362-1	Drain Adapter	30	17668-1	Relay switch (Model 38104 & 38105 Only)
13	See Cutting Board Chart	Cutting Board	not shown	44407-2	Switch and Bracket Assy (ref. 22 and 23)
14	21607-3	Label, switch	not shown	17076-3	Screw, Thermostat
15	17651-3	Screw, #14 x .750 thread cutting	not shown	26543-3	Strain Relief
16	17014-3	Screw, #10-32 x .500 Lg.	not shown	2327901-1	Low Water Light, Blue, 208-240 Volt
17	17741-3	Clamp, loop	not shown	17559-1	Low Water Light, Red, 120 Volt
			not shown	25438-1	Low Water Switch, 250°F +/- 9°F (125 °C)

WIRING DIAGRAM

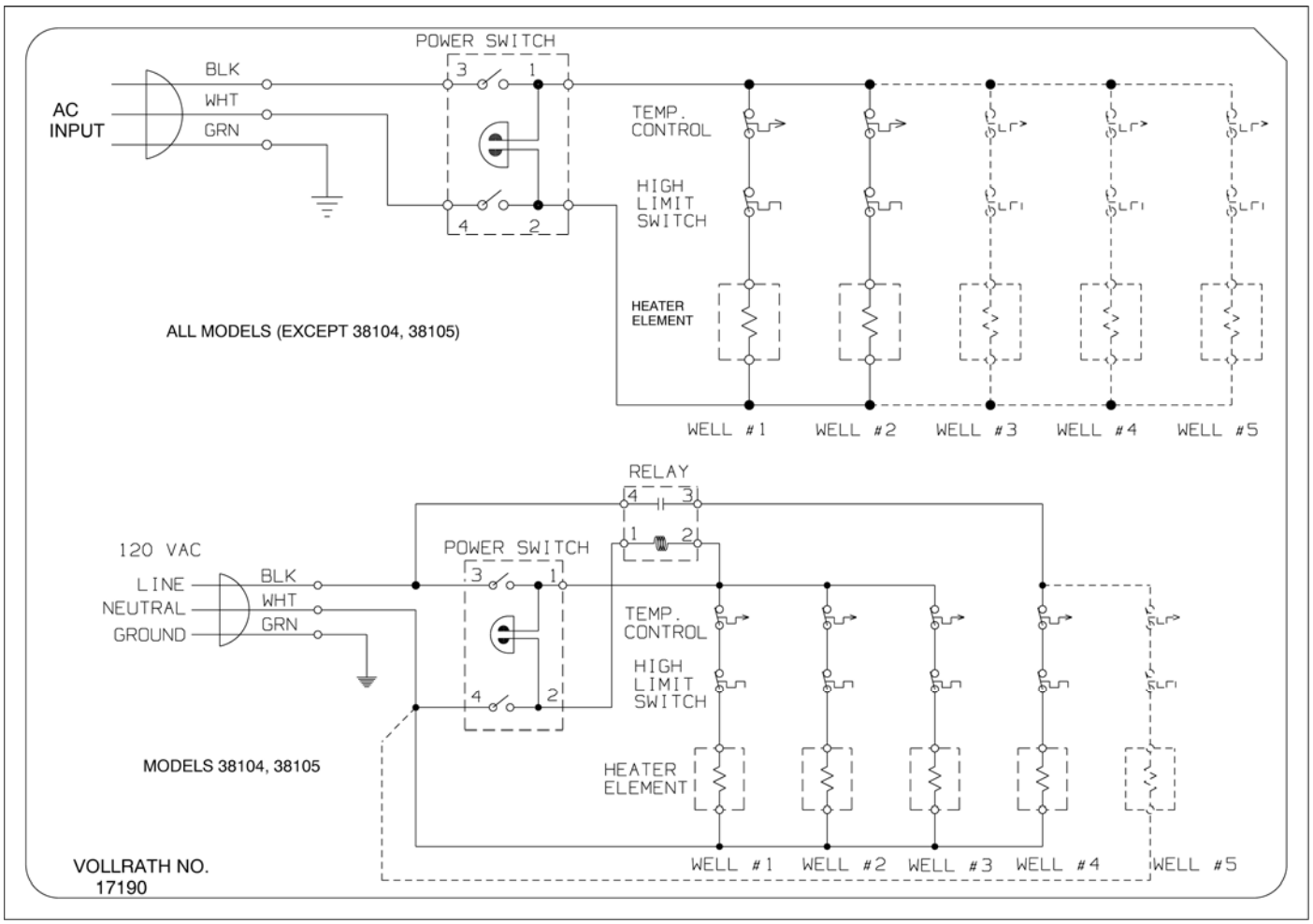

SERVEWELL® OPERATION

All units come standard with a properly rated cord and plug. Power is controlled first by a double pole lighted switch. The switch when closed allows power to the thermostats. The thermostats are a capillary bulb thermostat that will react to temperature changes as transmitted to the bulb through the element casting. When the thermostats close, power is then sent to the high limit switch. The high limit switch is normally closed. It will open if the temperature exceed 175° C ± 9° for safety. Power passing through the high limit switch will then energize the element. The neutral wire (or secondary load wire in 208V or 240V systems) from the switch is connected directly to the element.

WARRANTY INFORMATION

Warranty Policy for The Vollrath Co. L.L.C

The Vollrath Company L.L.C. warranties all products it manufactures and distributes against defects in materials and workmanship for a period of one year - except as listed below:

- Refrigeration compressors – 5 year warranty
- Intrigue & Classic Select cookware – Limited lifetime warranty
- Replacement parts – 90 (ninety days) on the part only
- Fry pans and coated cookware – 90 (ninety days)

All warranties cover normal use and service only and are void if the product has been damaged by accident, neglect, improper use or other causes not arising out of defects in material or workmanship. The Vollrath Company shall not be liable for loss of use of the product or other incidental or consequential costs, expenses or damage incurred by the purchaser.

Warranty work must have prior approval from The Vollrath Company L.L.C.

ServeWell® Warranty

All ServeWell® models are to be repaired or replaced in the field, at the discretion of The Vollrath Company L.L.C., in accordance with the warranty policy listed above. Should you have a problem with your unit and it is under warranty, please contact an authorized service center nearest to you or call The Vollrath Service number for the location of a service center near you. Please have the model number, series number and date of purchase information available when calling.

The Vollrath Company L.L.C. Service Number 1-800-628-0832

VOLLRATH®

Setting the Standard™

The Vollrath Company, L.L.C.
1236 North 18th Street
Sheboygan, WI 53082-0611
U.S.A.
Main Tel: 800.624.2051
Service Tel: 800.628.0832
FAX: 800.752.5620

Vollrath of Canada, Ltd.
6320 Danville Road, Unit 1
Mississauga, Ontario L5T 2L7
Canada
Tel: 905.565.1167
FAX: 905.565.1168