Howard-McCray

GSR Series - Reach In Sliding Glass Door Refrigerators - Bottom Mount

• PRODUCT SPECIFICATIONS SHEETS

Shown with hinged glass doors

• Cases are designed to operate at 75 degrees Fahrenheit and 55% relative humidity

Self-Contained Remote	GSR48BM R-GSR48BM	GSR75BM R-GSR75BM	GSR102BM R-GSR102BM
Length	52-1/4"	78"	103-3/4"
Height	82-1/4"	82-1/4"	82-1/4"
Depth with drain cover	35-1/2"	35-1/2"	35-1/2"
(Dimensions are +/-1/4")			

• Specification subject to change without notice

Howard-McCray

GSR Series - Reach In Sliding Glass Door Refrigerators - Bottom Mount

Standard Specifications and Optional Features

CONSTRUCTION UL Classified to ANSI/NSF 7 Heavy duty construction CFC free foamed in place insulation Removable front grille for easy servicing 2, 3 and 4 door models available Heavy duty easy glide Pike sliding doors	**FINISHES** Doors-Black vinyl extrusion Exterior-designer white Interior-designer white Rear-coated galvanized
INTERIOR White aluminum ends and back White aluminum floor Aluminum evaporater fan housing 4 heavy duty epoxy coated shelves per door	**REFRIGERATION** Bottom mounted condensing unit R134a refrigeration 2 & 3 door-capillary tube 4 door-expansion valve Remote available
EXTERIOR White aluminum ends and fronts Double pane glass doors 24-3/4" X 59-1/2" provides wide view display	**LIGHTING** Vertical light behind mullion 2 Dr = 1 light 3 Dr = 2 lights 4 Dr = 3 lights
ELECTRICAL REQUIREMENTS 2,3 Door Units 115V/60Hz/1Ph Cord and plug 4 Door 115V/208-230V/60Hz/1Ph Unit must be hard wired UL/CUL listed	***Important Note:* All refrigerated cases are designed to operate in an environment of 75 degrees and 55% relative humidity.** ***Important Note:* Product must be cooled before being displayed within the case.**

OPTIONAL FEATURES

Stainless steel, laminate or paint Digital thermometer Extra shelf with clips	Door locks

A Division of HMC Enterprises LLC • 2501 Grant Avenue • Philadelphia, PA 19114 USA
(215) 464-6800 • 1-800-344-8222 • Fax (215) 969-4890 • E-Mail: sales@howardmccray.com • www.howardmccray.com

Howard-McCray

GSR Series - Reach In Sliding Glass Door Refrigerators - Bottom Mount

Technical Data

Model #	Self contained	GSR48BM	GSR75BM	GSR102BM
	Remote	R-GSR48BM	R-GSR75BM	R-GSR102BM
Length Height Depth with drain cover (Dimensions are +/- 1/4")		52-1/4" 82-1/4" 35-1/2"	78" 82-1/4" 35-1/2"	103-3/4" 82-1/4" 35-1/2"
Operating temperature Refrigerant System Type Compressor size- HP Refrigeration system BTU's at +20˚F Evap. Temp. Voltage Amperage Amperage Cord and plug	 Self contained Self contained Remote Self contained Remote	38˚F to 41˚F R134a Capillary tube 1/3 Temperature Control 2400 115V 10.1A 2.5A Yes	38˚F to 41˚F R134a Capillary tube 1/2 Temperature Control 4400 115V 13.0A 3.3A Yes	38˚F to 41˚F R134a Expansion valve 3/4 Pressure control 5920 115/208-230V 6.4/7.1A 4.9A No
Exterior color Interior color Inside end panels Floors Drain Electric Condensate Total shelves Door size Cubic capacity (ft^3)		White White White White Yes 8 24-¾"X59-½" (2) 48	White White White White Yes 12 24-¾"X59-½"(2) 26-15/16"X59-½"(2) 75	White White White White Yes 16 24-¾"X59-½"(4) 102

SHIPPING INFORMATION

Height Length Depth Gross weight Cubic feet	 Self contained Remote	86" 56" 44" 570# 559# 77ft^3	86" 84" 44" 790# 665# 125ft^3	86" 109" 44" 1075# 925# 236ft^3

- **Cases are designed to operate at 75 degrees Fahrenheit and 55% relative humidity**
- **Specification subject to change without notice**

A Division of HMC Enterprises LLC *• 2501 Grant Avenue • Philadelphia, PA 19114 USA*
(215) 464-6800 • 1-800-344-8222 • Fax (215) 969-4890 • E-Mail: sales@howardmccray.com • www.howardmccray.com

Howard-McCray

GSR Series - Reach In Sliding Glass Door Refrigerators - Bottom Mount

Technical Data • Side View • Plan View

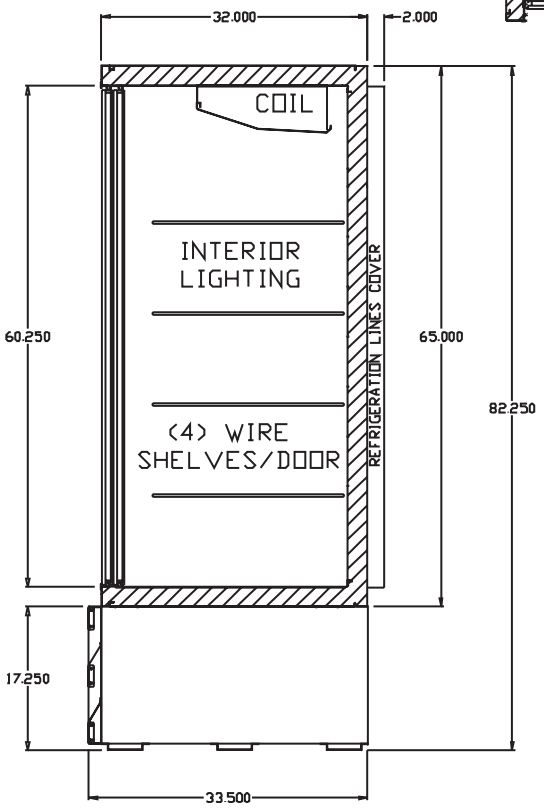

Cross Section

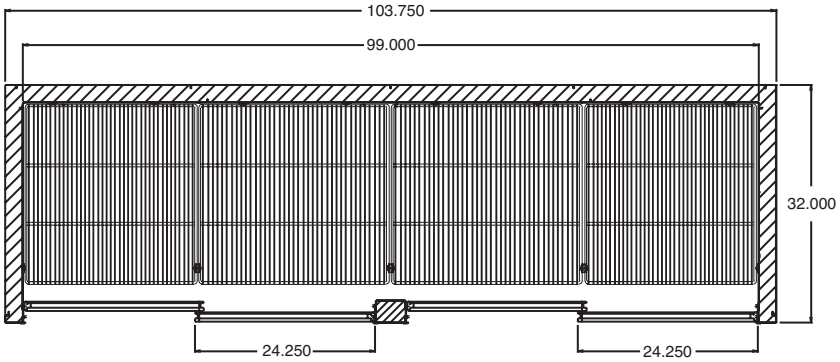

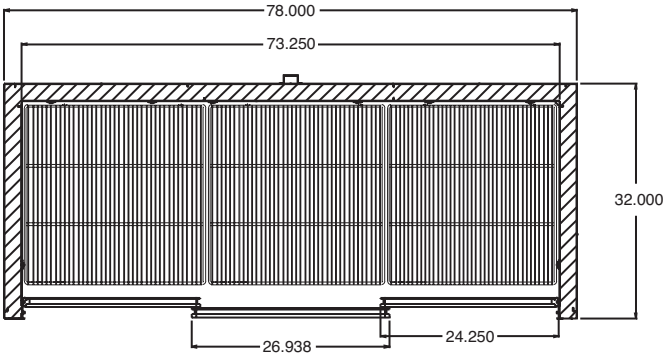

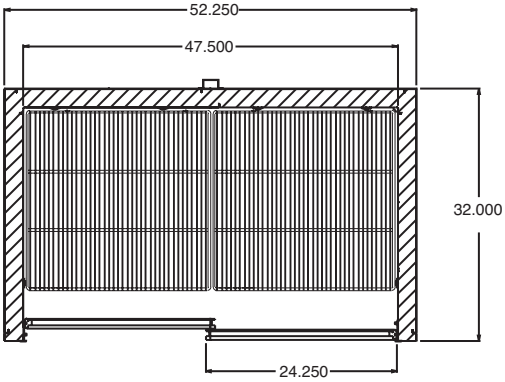

Plan Views

A Division of HMC Enterprises LLC *• 2501 Grant Avenue • Philadelphia, PA 19114 USA*

(215) 464-6800 • 1-800-344-8222 • Fax (215) 969-4890 • E-Mail: sales@howardmccray.com • www.howardmccray.com