Howard-McCray

Open Merchandisers-32 Series
Multi Purpose 44"H - Refrigerator Endless Design

• PRODUCT SPECIFICATIONS SHEETS

• Cases are designed to operate at 75 degrees Fahrenheit and 55% relative humidity

Self-Contained Remote	S32E-3 R-S32E-3	S32E-4 R-S32E-4	S32E-6 R-S32E-6
Length with ends	38"	50"	74"
Length without ends	36"	48"	72"
Height with ends	44"	44"	44"
Height without ends	43-7/8"	43-7/8"	43-7/8"
Depth with ends	30-1/2"	30-1/2"	30-1/2"
Depth without ends	30"	30"	30"
(Dimensions are +/-1/4")			

• Specification subject to change without notice

Howard-McCray

Open Merchandisers-32 Series
Multi Purpose 44"H - Refrigerator Endless Design

Standard Specifications and Optional Features

CONSTRUCTION UL Classified to ANSI/NSF 7 Foamed in place CFC free foam Heavy gauge steel super structure Endless design allows for continuous line up	**FINISHES** Designer white or black end panels Designer white or black front rail Designer white or black front color band Designer white or black end trim
INTERIOR Designer white or black end panels Removable designer white or black floor racks Designer white or black perforated rear wall *(for even air distribution)* 3 tier step rack	**REFRIGERATION** R134a expansion valve system Automatic condensate Low velocity fans located below deck area *(to insure even flow of air)* Pressure control maintains constant temperatures Auto defrost controlled by time clock *(self contained units only)* Air screen technology Self contained system Copeland hermetic unit Remotes available
EXTERIOR Designer white or black ends and front Designer white or black color-band Designer white or black end trim Removable front grille allows for cleaning and servicing	**LIGHTING**
ELECTRICAL REQUIREMENTS 115V/60Hz/1Ph Cord and plug provided UL/CUL listed	***Important Note:* All refrigerated cases are designed to operate in an environment of 75 degrees and 55% relative humidity.** ***Important Note:* Product must be cooled before being displayed within the case.**

(ALL WHITE OR ALL BLACK, NO EXTRA CHARGE—IF COLORS ARE MIXED AN ADDITIONAL CHARGE WILL APPLY)

OPTIONAL FEATURES

Rear grille Digital thermometer Sandwich/ fruit racks	Stainless steel, laminate or paint Night cover Peg bars Glass shelf

c UL us LISTED

CLASSIFIED UL EPH ANSI/NSF 7

A Division of HMC Enterprises LLC • *2501 Grant Avenue • Philadelphia, PA 19114 USA*
(215) 464-6800 • 1-800-344-8222 • Fax (215) 969-4890 • E-Mail: sales@howardmccray.com • www.howardmccray.com

Howard-McCray

Open Merchandisers-32 Series
Multi Purpose 44"H - Refrigerator Endless Design

Technical Data

Model #	Self contained	S32E-3	S32E-4	S32E-6
	Remote	R-S32E-3	R-S32E-4	R-S32E-6
Length with ends		38"	50"	74"
Length without ends		36"	48"	72"
Height with ends		44"	44"	44"
Height without ends		43-7/8"	43-7/8"	33-7/8"
Depth with ends		30-1/4"	30-1/4"	30-1/4"
Depth without ends		30"	30"	30"
(Dimensions are +/- 1/4")				
Operating temperature		36˚F to 40˚F	36˚F to 40˚F	36˚F to 40˚F
Refrigerant (expansion valve)	Self contained	R134a	R134a	R134a
Compressor size HP	Self contained	1/2	1/2	3/4
Pressure control settings @ 75˚F, 55%RH	CUT IN	29	29	29
	CUT OUT	12	12	12
Defrost per day (24 hours)	Air Defrost	6 @ 20 min.	6 @ 20 min.	6 @ 20 min.
BTU's at +20˚F Evap. Temp.	Remote	3100	4130	6200
Voltage		115V	115V	115V
Amperage	Self contained	11.3A	11.3A	16.0A
Amperage	Remote	0.7A	0.7A	1.4A
Cord and plug		Yes(15A)	Yes(15A)	Yes(20A)
Exterior color		White	White	White
Interior color		White	White	White
Inside end panels		White	White	White
Floors		White	White	White

(ALL WHITE OR ALL BLACK, NO EXTRA CHARGE—IF COLORS ARE MIXED AN ADDITIONAL CHARGE WILL APPLY)

SHIPPING INFORMATION

Height		49"	49"	49"
Depth		44"	44"	44"
Length		61"	61"	87"
Gross weight	Self contained	365#	410#	505#
	Remote	240#	285#	355#
Cubic feet		75ft³	75ft³	75ft³

- **Cases are designed to operate at 75 degrees Fahrenheit and 55% relative humidity**
- **Specification subject to change without notice**

A Division of HMC Enterprises LLC • *2501 Grant Avenue • Philadelphia, PA 19114 USA*
(215) 464-6800 • 1-800-344-8222 • Fax (215) 969-4890 • E-Mail: sales@howardmccray.com • www.howardmccray.com

Howard-McCray

Open Merchandisers-32 Series
Multi Purpose 44"H - Refrigerator Endless Design

Technical Data • Side View • Plan View

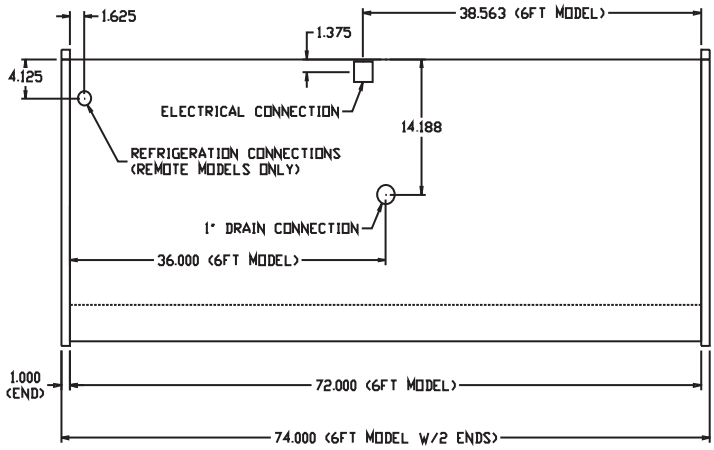

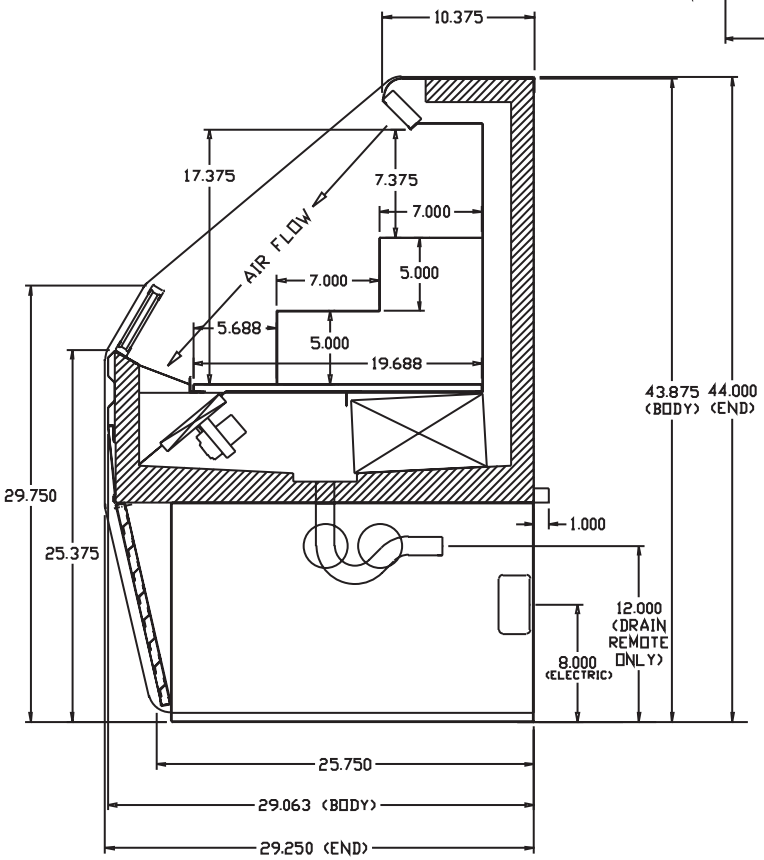

Cross Section

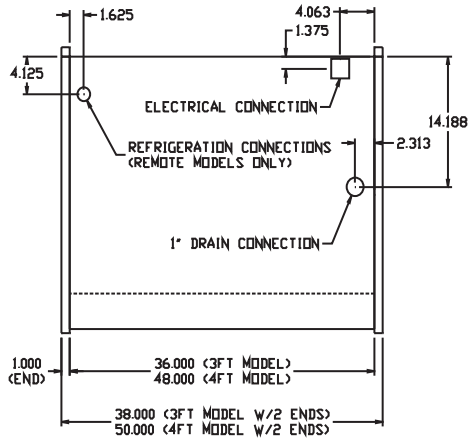

Plan View

A Division of HMC Enterprises LLC *• 2501 Grant Avenue • Philadelphia, PA 19114 USA*

(215) 464-6800 • 1-800-344-8222 • Fax (215) 969-4890 • E-Mail: sales@howardmccray.com • www.howardmccray.com