Howard-McCray

Open Merchandisers - Ovation Series
Endless Design 60"H - Dairy

• PRODUCT SPECIFICATIONS SHEETS

Shown is a 72" H dairy case

• Cases are designed to operate at 75 degrees Fahrenheit and 55% relative humidity

Self-Contained Remote	SC-OD30E-3L-LS R-OD30E-3L-LS	SC-OD30E-4L-LS R-OD30E-4L-LS	SC-OD30E-6L-LS R-OD30E-6L-LS	SC-OD30E-8L-LS R-OD30E-8L-LS
Length with ends	39"	51"	75"	99"
Length without ends	36"	48"	72"	96"
Height with ends	60"	60"	60"	60"
Depth with ends	30"	30"	30"	30"
(Dimensions are +/-1/4")				

• Specification subject to change without notice

Howard-McCray

Open Merchandisers - Ovation Series
Endless Design 60"H - Dairy

Standard Specifications and Optional Features

CONSTRUCTION Foamed in place CFC free foam Heavy gauge steel super structure Multi deck Endless design allows for continuous line up	**FINISHES** Designer white or black end panels Designer white or black front bumper Designer white or black end trim Designer white or black rear
INTERIOR Designer white or black end panels Removable designer white or black floor pans Designer white or black perforated rear wall (*for even air distribution)* Full length lighting at top of unit 1 level of 12" lighted shelving 1 level of 14" lighted shelving 3 levels of product display Stylish tag molding on each shelf	**REFRIGERATION** R404A expansion valve system Low velocity fans located below deck area *(to insure even flow of air)* Pressure control maintains constant temperatures Automatic defrost controlled by time clock *(self contained units only)* Air screen technology Self contained system Copeland hermetic unit Remotes available DRAIN IS REQUIRED
EXTERIOR Designer white or black ends and front Designer white or black bumper Designer white or black end trim Removable front grille for cleaning and servicing Plexiglas on end panel	**LIGHTING** 1 row at inside top of unit 2 rows of lighted shelves
ELECTRICAL REQUIREMENTS Unit must be hard wired UL/CUL listed See Tech page for details on voltage	***Important Note:* All refrigerated cases are designed to operate in an environment of 75 degrees and 55% relative humidity.** ***Important Note:* Product must be cooled before being displayed within the case.** ***Important Note:* DRAIN IS REQUIRED**

OPTIONAL FEATURES

Night covers Peg bars Condensate pan (4' case only) Insulated divider for line ups Electronic control system	Stainless steel, laminate or paint Product stops on shelving Security cover Plexiglas divider for line ups Digital thermometer

(ALL WHITE OR ALL BLACK, NO EXTRA CHARGE—IF COLORS ARE MIXED AN ADDITIONAL CHARGE WILL APPLY)

c UL us LISTED

A Division of HMC Enterprises LLC • *2501 Grant Avenue • Philadelphia, PA 19114 USA*
(215) 464-6800 • 1-800-344-8222 • Fax (215) 969-4890 • E-Mail: sales@howardmccray.com • www.howardmccray.com

Howard-McCray

Open Merchandisers - Ovation Series
Endless Design 60"H - Dairy

Technical Data

Model	Self contained	SC-OD30E-3L-LS	SC-OD30E-4L-LS	SCOD30E-6L-LS	SC-OD30E-8L-LS
	Remote	R-OD30E-3L-LS	R-OD30E-4L-LS	R-OD30E-6L-LS	R-OD30E-8L-LS
Length with ends		39"	51"	75"	99"
Length without ends		36"	48"	72"	96"
Height with ends		60"	60"	60"	60"
Depth with ends		30"	30"	30"	30"
(Dimensions are +/- 1/4")					
Operating temperature		36˚F to 40˚F	36˚F to 40˚F	36˚F to 40˚F	36˚F to 40˚F
Refrigerant (expansion valve)	Self contained	R404A	R404A	R404A	R404A
Compressor size- HP	Self contained	1/2	1/2	3/4	1
Pressure control settings					
@ 75˚F, 55%RH	CUT IN	87	87	87	87
	CUT OUT	43	43	43	43
Defrost per day (24 hours)	Air Defrost	3 @ 30 min.	3 @ 30 min.	3 @ 30 min.	3 @ 30 min.
BTU's at +20˚F Evap. Temp.	Remote	3900	5200	7800	10400
Voltage		115V	115V	115/208-230V	115/208-230V
Amperage	Self contained	12.0A	13.7A	13.1A	14.3A
Amperage, lights & fans	Remote	1.4A	2.2A	2.8A	4.3A
Cord and plug		No	No	No	No
Exterior color		White or Black	White or Black	White or Black	White or Black
Interior color		White or Black	White or Black	White or Black	White or Black
Inside end panels		White or Black	White or Black	White or Black	White or Black
Floors		White or Black	White or Black	White or Black	White or Black

(ALL WHITE OR ALL BLACK, NO EXTRA CHARGE—IF COLORS ARE MIXED AN ADDITIONAL CHARGE WILL APPLY)

SHIPPING INFORMATION

Height		65"	65"	65"	65"
Depth		44"	44"	44"	44"
Length		61"	61"	87"	112"
Gross weight	Self contained	505#	585#	810#	1035#
	Remote	380#	460#	685#	860#
Cubic feet		99ft³	99ft³	142ft³	300ft³

- **Cases are designed to operate at 75 degrees Fahrenheit and 55% relative humidity**
- **Cases are equipped with drains; check your local building codes for connection requirements.**
- **Specification subject to change without notice**

A Division of HMC Enterprises LLC *• 2501 Grant Avenue • Philadelphia, PA 19114 USA*
(215) 464-6800 • 1-800-344-8222 • Fax (215) 969-4890 • E-Mail: sales@howardmccray.com • www.howardmccray.com

Howard-McCray

Open Merchandisers - Ovation Series
Endless Design 60"H - Dairy

Technical Data • Side View • Plan View

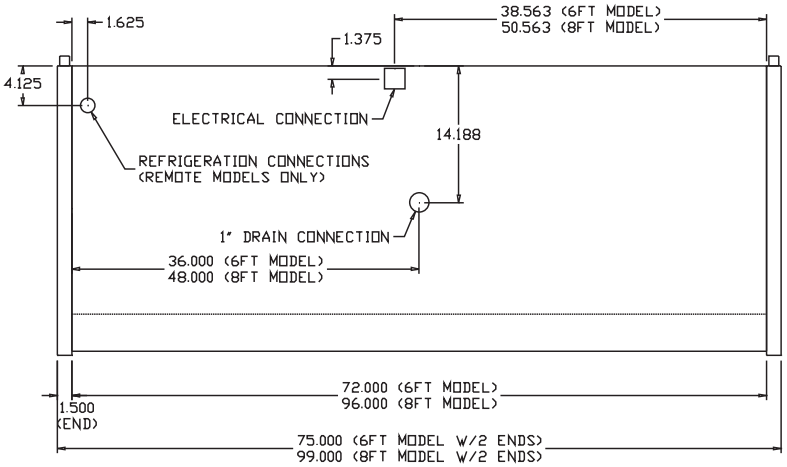

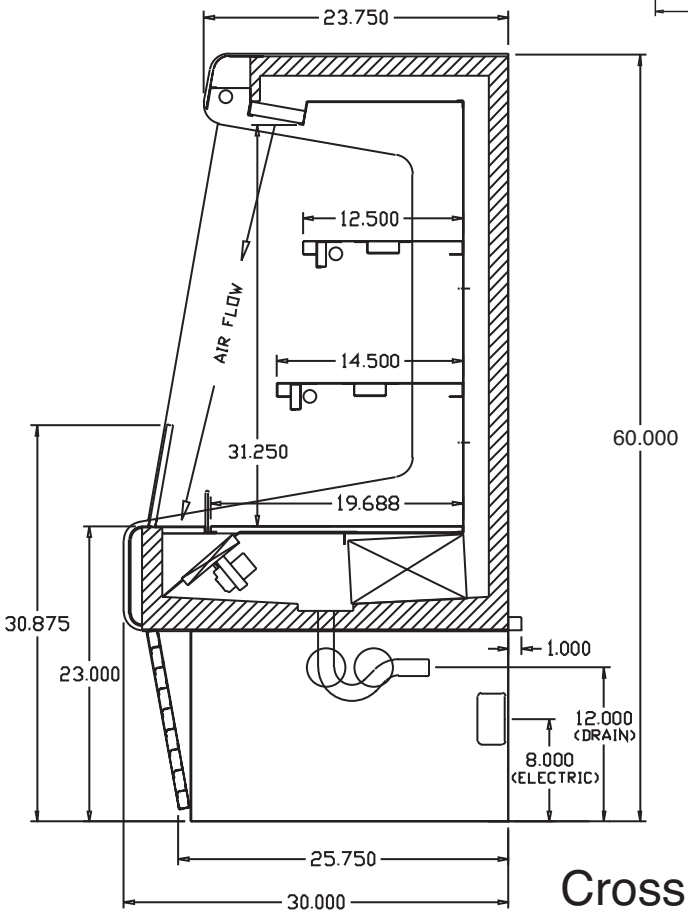

Cross Section

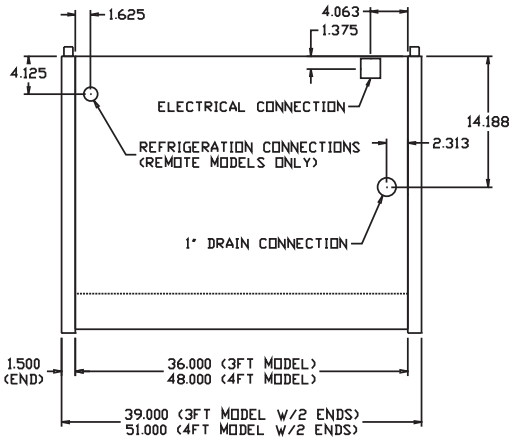

Plan View

A Division of HMC Enterprises LLC *• 2501 Grant Avenue • Philadelphia, PA 19114 USA*
(215) 464-6800 • 1-800-344-8222 • Fax (215) 969-4890 • E-Mail: sales@howardmccray.com • www.howardmccray.com