Howard-McCray

# Open Merchandisers - Ovation Series
# Endless Design 72"H - Dairy

• PRODUCT SPECIFICATIONS SHEETS

• Cases are designed to operate at 75 degrees Fahrenheit and 55% relative humidity

| Self-Contained Remote | SC-OD30E-3-LS R-OD30E-3-LS | SC-OD30E-4-LS R-OD30E-4-LS | SC-OD30E-6-LS R-OD30E-6-LS | SC-OD30E-8-LS R-OD30E-8-LS |
|---|---|---|---|---|
| **Length with ends** | 39" | 51" | 75" | 99" |
| **Length without ends** | 36" | 48" | 72" | 96" |
| **Height with ends** | 72" | 72" | 72" | 72" |
| **Depth with ends** | 30" | 30" | 30" | 30" |

(Dimensions are +/-1/4")

• Specification subject to change without notice

Howard-McCray

**Open Merchandisers - Ovation Series**
**Endless Design 72"H - Dairy**

# Standard Specifications and Optional Features

| | |
|---|---|
| **CONSTRUCTION**<br>Foamed in place CFC free foam<br>Heavy gauge steel super structure<br>Multi deck<br>Endless design allows for continuous line up | **FINISHES**<br>Designer white or black end panels<br>Designer white or black front bumper<br>Designer white or black end trim<br>Designer white or black rear |
| **INTERIOR**<br>Designer white or black end panels<br>Removable designer white or black floor pans<br>Designer white or black perforated rear wall (*for even air distribution)*<br>Full length lighting at top of unit<br>1 level of 12" lighted shelving<br>2 levels of 14" lighted shelving<br>4 levels of product display<br>Stylish tag molding on each shelf | **REFRIGERATION**<br>R404A expansion valve system<br>Low velocity fans located below deck area *(to insure even flow of air)*<br>Pressure control maintains constant temperatures<br>Automatic defrost controlled by time clock *(self contained units only)*<br>Air screen technology<br>Self contained system<br>Copeland hermetic unit<br>Remotes available |
| **EXTERIOR**<br>Designer white or black ends and front<br>Designer white or black bumper<br>Designer white or black end trim<br>Removable front grille for cleaning and servicing<br>Plexiglas on end panel | **LIGHTING**<br>1 row at inside top of unit<br>3 rows of lighted shelves |
| **ELECTRICAL REQUIREMENTS**<br>Unit must be hard wired<br>UL/CUL listed<br>See Tech page for details on voltage | ***Important Note:* All refrigerated cases are designed to operate in an environment of 75 degrees and 55% relative humidity.**<br><br>***Important Note:* Product must be cooled before being displayed within the case.**<br><br>***Important Note:* DRAIN IS REQUIRED** |

## OPTIONAL FEATURES

| | |
|---|---|
| Night covers<br>Peg bars<br>Condensate pan (4' case only)<br>Insulated divider for line ups<br>Electronic control system | Stainless steel, laminate or paint<br>Product stops on shelving<br>Security cover<br>Plexiglas divider for line ups<br>Digital thermometer |

**(ALL WHITE OR ALL BLACK, NO EXTRA CHARGE—IF COLORS ARE MIXED AN ADDITIONAL CHARGE WILL APPLY)**

c UL us LISTED

***A Division of HMC Enterprises LLC*** • *2501 Grant Avenue • Philadelphia, PA 19114 USA*
*(215) 464-6800 • 1-800-344-8222 • Fax (215) 969-4890 • E-Mail: sales@howardmccray.com • www.howardmccray.com*

Howard-McCray

**Open Merchandisers - Ovation Series**
**Endless Design 72"H - Dairy**

# Technical Data

| Model | Self contained | SC-OD30E-3-LS | SC-OD30E-4-LS | SC-OD30E-6-LS | SC-OD30E-8-LS |
|---|---|---|---|---|---|
| | Remote | R-OD30E-3-LS | R-OD30E-4-LS | R-OD30E-6-LS | R-OD30E-8-LS |
| **Length with ends** | | 39" | 51" | 75" | 99" |
| **Length without ends** | | 36" | 48" | 72" | 96" |
| **Height with ends** | | 72" | 72" | 72" | 72" |
| **Depth with ends** | | 30" | 30" | 30" | 30" |
| **(Dimensions are +/- 1/4")** | | | | | |
| **Operating temperature** | | 36˚F to 40˚F | 36˚F to 40˚F | 36˚F to 40˚F | 36˚F to 40˚F |
| **Refrigerant** (expansion valve) | Self contained | R404A | R404A | R404A | R404A |
| **Compressor size- HP** | Self contained | 1/2 | 1/2 | 3/4 | 1 |
| **Pressure control settings** | | | | | |
| **@ 75˚F, 55%RH** | CUT IN | 87 | 87 | 87 | 87 |
| | CUT OUT | 43 | 43 | 43 | 43 |
| **Defrost per day (24 hours)** | Air Defrost | 3 @ 30 min. | 3 @ 30 min. | 3 @ 30 min. | 3 @ 30 min. |
| **BTU's at +20˚F Evap. Temp.** | Remote | 3900 | 5200 | 7800 | 10400 |
| **Voltage** | Self contained | 115V | 115V | 115/208-230V | 115/208-230V |
| **Amperage** | Remote | 12.0A | 13.7A | 13.1A | 14.3A |
| **Amperage, lights & fans** | | 1.4A | 2.2A | 2.8A | 4.3A |
| **Cord and plug** | | No | No | No | No |
| **Exterior color** | | White or Black | White or Black | White or Black | White or Black |
| **Interior color** | | White or Black | White or Black | White or Black | White or Black |
| **Inside end panels** | | White or Black | White or Black | White or Black | White or Black |
| **Floors** | | White or Black | White or Black | White or Black | White or Black |

**(ALL WHITE OR ALL BLACK, NO EXTRA CHARGE—IF COLORS ARE MIXED AN ADDITIONAL CHARGE WILL APPLY)**

## SHIPPING INFORMATION

| | | | | | |
|---|---|---|---|---|---|
| **Height** | | 76" | 76" | 76" | 76" |
| **Depth** | | 44" | 44" | 44" | 44" |
| **Length** | | 61" | 61" | 87" | 109" |
| **Gross weight** | Self contained | 535# | 615# | 860# | 1085# |
| | Remote | 410# | 490# | 710# | 910# |
| **Cubic feet** | | 115ft³ | 115ft³ | 166ft³ | 206ft³ |

- **Cases are designed to operate at 75 degrees Fahrenheit and 55% relative humidity**
- **Cases are equipped with drains; check your local building codes for connection requirements.**
- **Specification subject to change without notice**

***A Division of HMC Enterprises LLC*** • *2501 Grant Avenue • Philadelphia, PA 19114 USA*
*(215) 464-6800 • 1-800-344-8222 • Fax (215) 969-4890 • E-Mail: sales@howardmccray.com • www.howardmccray.com*

Howard-McCray

**Open Merchandisers - Ovation Series**
**Endless Design 72"H - Dairy**

# Technical Data • Side View • Plan View

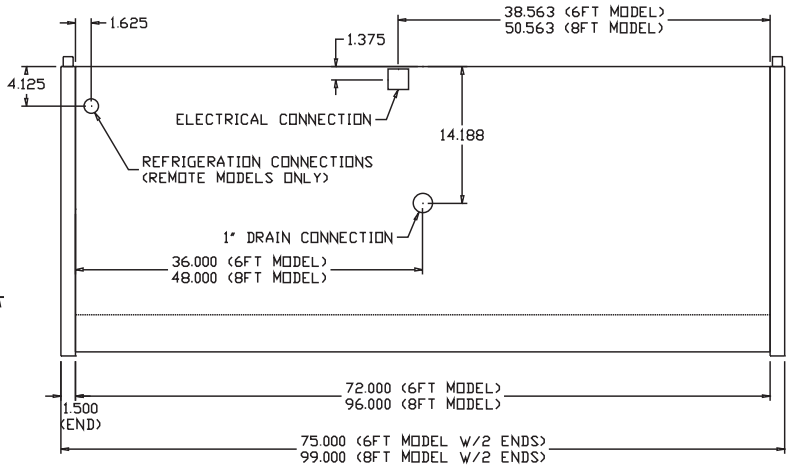


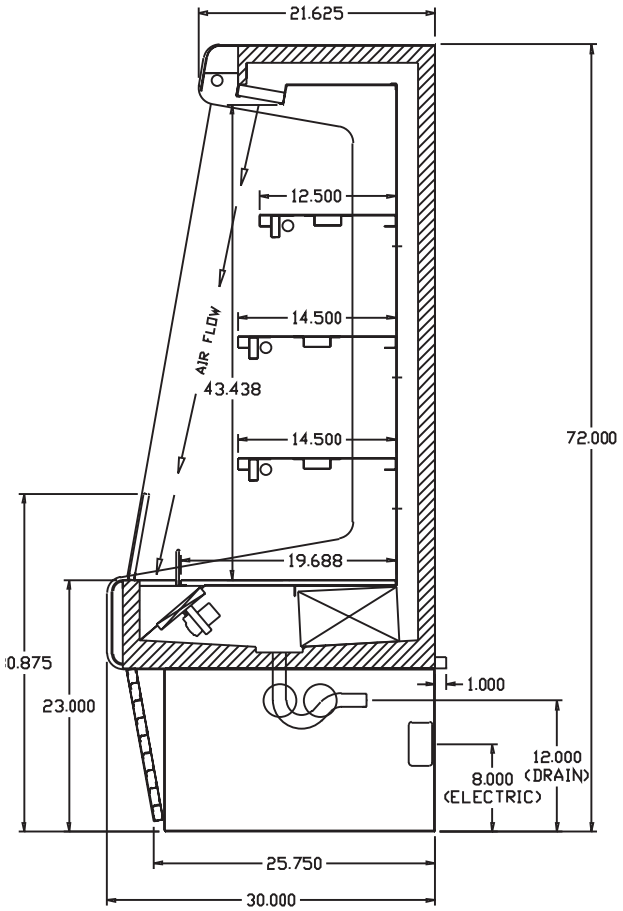


Cross Section

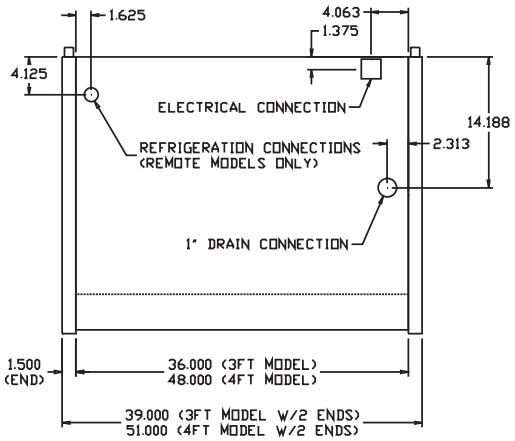


Plan View


***A Division of HMC Enterprises LLC*** *• 2501 Grant Avenue • Philadelphia, PA 19114 USA*
*(215) 464-6800 • 1-800-344-8222 • Fax (215) 969-4890 • E-Mail: sales@howardmccray.com • www.howardmccray.com*