Howard-McCray

Open Merchandisers - Ovation Series
Endless Design 72"H - Produce

• PRODUCT SPECIFICATIONS SHEETS

Shown is a 60"H Produce case

• Cases are designed to operate at 75 degrees Fahrenheit and 55% relative humidity

Self-Contained Remote	SC-OP30E-3-LS R-OP30E-3-LS	SC-OP30E-4-LS R-OP30E-4-LS	SC-OP30E-6-LS R-OP30E-6-LS	SC-OP30E-8-LS R-OP30E-8-LS
Length with ends	39"	51"	75"	99"
Length without ends	36"	48"	72"	96"
Height with ends	72"	72"	72"	72"
Depth with ends	30"	30"	30"	30"

(Dimensions are +/-1/4")

• Specification subject to change without notice

Howard-McCray

Open Merchandisers - Ovation Series
Endless Design 72"H - Produce

Standard Specifications and Optional Features

CONSTRUCTION UL Classified to ANSI/NSF 7 Foamed in place CFC free foam Heavy gauge steel super structure Multi deck Endless design allows for continuous line up	**FINISHES** Designer white or black end panels Designer white or black front bumper Designer white or black end trim Coated galvanized rear
INTERIOR Designer white or black end panels Removable designer white or black floor racks Designer white or black perforated rear wall (*for even air distribution)* Full length lighting at top of unit 1 level of 14" shelving with product stops Full length mirror to enhance product display Stylish tag molding on shelf	**REFRIGERATION** R404A expansion valve system Low velocity fans located below deck area *(to insure even flow of air)* Pressure control maintains constant temperatures Automatic defrost controlled by time clock *(self contained units only)* Air screen technology Self contained system Copeland hermetic unit Remotes available
EXTERIOR Designer white or black ends and front Designer white or black bumper Designer white or black end trim Removable front grille for cleaning and servicing Plexiglas on end panel	**LIGHTING** 1 row at inside top of unit 1 lighted shelf with product stop
ELECTRICAL REQUIREMENTS Unit must be hard wired UL/CUL Listed See technical page for voltage	***Important Note:* All refrigerated cases are designed to operate in an environment of 75 degrees and 55% relative humidity.** ***Important Note:* DRAIN IS REQUIRED**

(ALL WHITE OR ALL BLACK, NO EXTRA CHARGE—IF COLORS ARE MIXED AN ADDITIONAL CHARGE WILL APPLY)

OPTIONAL FEATURES

Night cover Peg bars Condensate pan (4' case only) Insulated divider for line ups Electronic control system	Stainless steel, laminate or colors Security cover Plexiglas divider for line ups Digital thermometer

c UL us LISTED

CLASSIFIED UL EPH ANSI/NSF 7

A Division of HMC Enterprises LLC • *2501 Grant Avenue • Philadelphia, PA 19114 USA*
(215) 464-6800 • 1-800-344-8222 • Fax (215) 969-4890 • E-Mail: sales@howardmccray.com • www.howardmccray.com

Howard-McCray

Open Merchandisers - Ovation Series
Endless Design 72"H - Produce

Technical Data

Model	Self contained	SC-OP30E-3-LS	SC-OP30E-4-LS	SC-OP30E-6-LS	SC-OP30E-8-LS
	Remote	R-OP30E-3-LS	R-OP30E-4-LS	R-OP30E-6-LS	R-OP30E-8-LS
Length with ends		39"	51"	75"	99"
Length without ends		36"	48"	72"	96"
Height with ends		72"	72 "	72 "	72 "
Depth with ends		30"	30"	30"	30"
(Dimensions are +/- 1/4")					
Operating temperature		38˚F to 41˚F	38˚F to 41˚F	38˚F to 41˚F	38˚F to 41˚F
Refrigerant (expansion valve)	Self contained	R404A	R404A	R404A	R404A
Compressor size- HP	Self contained	1/2	1/2	3/4	3/4
Pressure control settings @ 75˚F, 55%RH	CUT IN	88	88	88	88
	CUT OUT	54	54	54	54
Defrost per day (24 hrs)	Hours @ 12pm	3 @ 30 min.	3 @ 30 min.	3 @ 30 min.	3 @ 30 min.
BTU's at +20˚F Evap. Temp.	Remote	3000	4000	6000	8000
Voltage		115V	115V	115V	115/208-230V
Amperage	Self contained	11.7A	12.4A	13.5A	12.5A
Amperage, lights & fans	Remote	1.0A	1.7A	2.0A	3.4A
Cord and plug		No	No	No	No
Exterior color		White or Black	White or Black	White or Black	White or Black
Interior color		White or Black	White or Black	White or Black	White or Black
Inside end panels		White or Black	White or Black	White or Black	White or Black
Floors		White or Black	White or Black	White or Black	White or Black

(ALL WHITE OR ALL BLACK, NO EXTRA CHARGE—IF COLORS ARE MIXED AN ADDITIONAL CHARGE WILL APPLY)

SHIPPING INFORMATION

Height		76"	76"	76"	76"
Depth		44"	44"	44"	44"
Length		61"	61"	87"	109"
Gross weight	Self contained	525#	605#	850#	1075#
	Remote	400#	480#	700#	900#
Cubic feet		115ft³	115ft³	166ft³	206ft³

- **Cases are designed to operate at 75 degrees Fahrenheit and 55% relative humidity**
- **Cases are equipped with drains; check your local building codes for connection requirements.**
- **Specification subject to change without notice**

A Division of HMC Enterprises LLC • *2501 Grant Avenue • Philadelphia, PA 19114 USA*
(215) 464-6800 • 1-800-344-8222 • Fax (215) 969-4890 • E-Mail: sales@howardmccray.com • www.howardmccray.com

Howard-McCray

Open Merchandisers - Ovation Series
Endless Design 72"H - Produce

Technical Data • Side View • Plan View

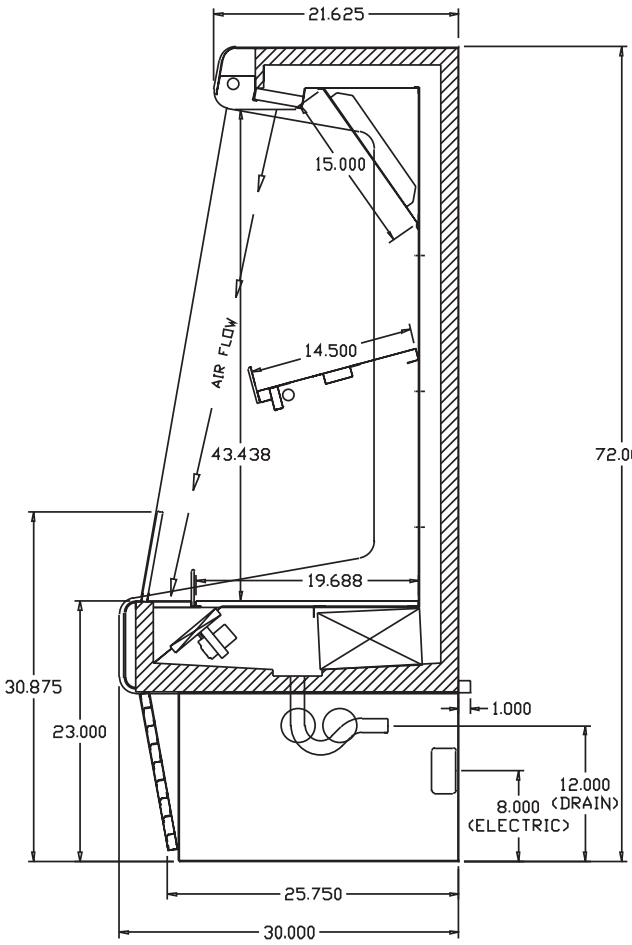

Cross Section

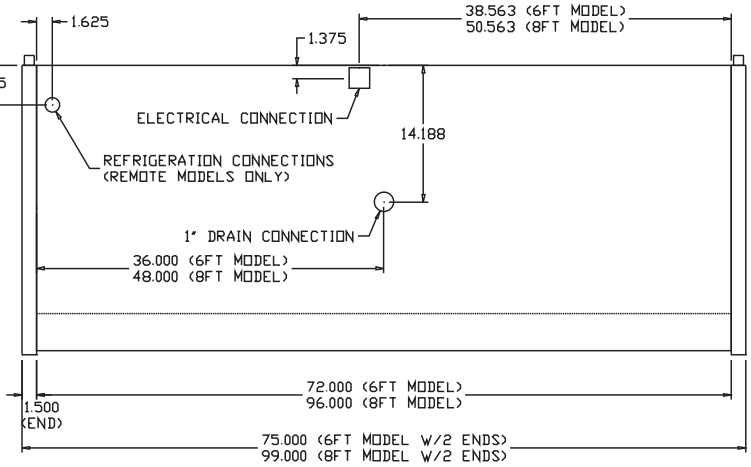

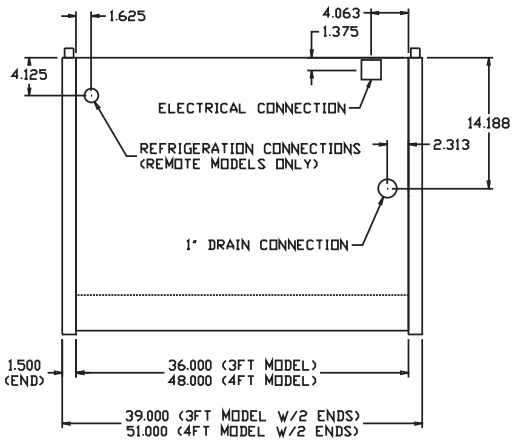

Plan View

A Division of HMC Enterprises LLC *• 2501 Grant Avenue • Philadelphia, PA 19114 USA*
(215) 464-6800 • 1-800-344-8222 • Fax (215) 969-4890 • E-Mail: sales@howardmccray.com • www.howardmccray.com