Howard-McCray

Open Merchandisers
32 Series – Endless Design - Meat

• PRODUCT SPECIFICATIONS SHEETS

• Cases are designed to operate at 75 degrees Fahrenheit and 55% relative humidity

Self-Contained Remote	SC-M32E-3-LS R-M32E-3-LS	SC-M32E-4-LS R-M32E-4-LS	SC-M32E-6-LS R-M32E-6-LS	R-M32E-8-LS
Length with ends	38"	50"	74"	98"
Length without ends	36"	48"	72"	96"
Height with ends	72-3/4"	72-3/4"	72-3/4"	72-3/4"
Height without ends	71-7/8"	71-7/8"	71-7/8"	71-7/8"
Depth with ends	29-3/8"	29-3/8"	29-3/8"	29-3/8"

(Dimensions are +/-1/4")

• Specification subject to change without notice

Howard-McCray

Open Merchandisers
32 Series – Endless Design - Meat

Standard Specifications and Optional Features

CONSTRUCTION Foamed in place CFC free foam Heavy gauge steel super structure Multi deck Endless design allows for continuous line up	**FINISHES** Designer white or black end panels Designer white or black front rail Designer white or black front color band Designer white or black end trim Coated galvanized rear
INTERIOR Designer white or black end panels Removable designer white or black floor pans Designer white or black perforated rear wall (*for even air distribution)* Full length lighting at top of unit 1 level of 12" lighted shelving with product stops 2 levels of 14" lighted shelving with product stops 4 levels of product display Over 50" of display area Stylish tag molding on each shelf	**REFRIGERATION** R404A expansion valve system Low velocity fans located below deck area *(to insure even flow of air)* Pressure control maintains constant temperatures Automatic defrost controlled by time clock *(self contained units only)* Air screen technology Self contained system Copeland hermetic unit Remotes available
EXTERIOR Designer white or black ends and front Designer white or black color-band Designer white or black end trim Removable front grille allows for cleaning and servicing 1" designer gray bumper	**LIGHTING** 1 row at inside top of unit 3 rows of lighted shelves
ELECTRICAL REQUIREMENTS Unit must be hard wired UL/CUL listed See Tech page for details on voltage	***Important Note:* All refrigerated cases are designed to operate in an environment of 75 degrees and 55% relative humidity.** ***Important Note:* Product must be cooled before being displayed within the case.** ***Important Note:* DRAIN IS REQUIRED**

OPTIONAL FEATURES

Night covers Peg bars Step shelves Condensate pan-4' case only Insulated divider for line ups	4" of Plexiglas on end panel Stainless steel, laminated or paint Security cover Plexiglas divider for line ups Digital thermometer

(ALL WHITE OR ALL BLACK, NO EXTRA CHARGE—IF COLORS ARE MIXED AN ADDITIONAL CHARGE WILL APPLY)

c UL us LISTED

A Division of HMC Enterprises LLC • *2501 Grant Avenue • Philadelphia, PA 19114 USA*
(215) 464-6800 • 1-800-344-8222 • Fax (215) 969-4890 • E-Mail: sales@howardmccray.com • www.howardmccray.com

Howard-McCray

Open Merchandisers
32 Series – Endless Design - Meat

Technical Data

Model	Self contained	SC-M32E-3-LS	SC- M32E-4-LS	SC-M32E-6-LS	N/A
	Remote	R-M32E-3-LS	R-M32E-4-LS	R-M32E-6-LS	R-M32E-8-LS
Length with ends		38"	50"	74"	98"
Length without ends		36"	48"	72"	96"
Height with ends		72-3/4"	72-3/4"	72-3/4"	72-3/4"
Height without ends		71-7/8"	71-7/8"	71-7/8"	71-7/8"
Depth with ends		29-3/8"	29-3/8"	29-3/8	29-3/8
(Dimensions are +/- 1/4")					
Operating temperature		34˚F to 38˚F	34˚F-38˚F	34˚F to 38˚F	34˚F to 38˚F
Refrigerant (expansion valve)	Self contained	R404A	R404A	R404A	R404A
Compressor size HP	Self contained	1/2	1/2	1	N/A
Pressure control settings					
@ 75˚F, 55%RH	CUT IN	87	87	87	N/A
	CUT OUT	43	43	43	N/A
Defrost per day (24 hours)	Air Defrost	3 @ 30 min.	3 @ 30 min.	3 @ 30 min.	N/A
BTU's at +20˚F Evap. Temp.	Remote	4200	5600	8400	11200
Voltage		115V	115V	115/208-230V	115V
Amperage	Self contained	12.0A	14.5A	15.6A	N/A
Amperage	Remote	1.4A	3.0A	5.6A	6.2A
Cord and plug		No	No	No	No
Exterior color		White or Black	White or Black	White or Black	White or Black
Interior color		White or Black	White or Black	White or Black	White or Black
Inside end panels		White or Black	White or Black	White or Black	White or Black
Floors		White or Black	White or Black	White or Black	White or Black

(ALL WHITE OR ALL BLACK, NO EXTRA CHARGE—IF COLORS ARE MIXED AN ADDITIONAL CHARGE WILL APPLY)

SHIPPING INFORMATION

Height		76"	76"	76"	76"
Depth		44"	44"	44"	44"
Length		61"	61"	87"	109"
Gross weight	Self contained	700#	700#	965#	1175#
	Remote	575#	575#	790#	1000#
Cubic feet		118ft³	118ft³	168ft³	211ft³

- **Cases are designed to operate at 75 degrees Fahrenheit and 55% relative humidity**
- **Cases are equipped with drains; check your local building codes for connection requirements.**
- **Specification subject to change without notice**

A Division of HMC Enterprises LLC • *2501 Grant Avenue • Philadelphia, PA 19114 USA*
(215) 464-6800 • 1-800-344-8222 • Fax (215) 969-4890 • E-Mail: sales@howardmccray.com • www.howardmccray.com

Howard-McCray

Open Merchandisers
32 Series – Endless Design - Meat

Technical Data • Side View • Plan View

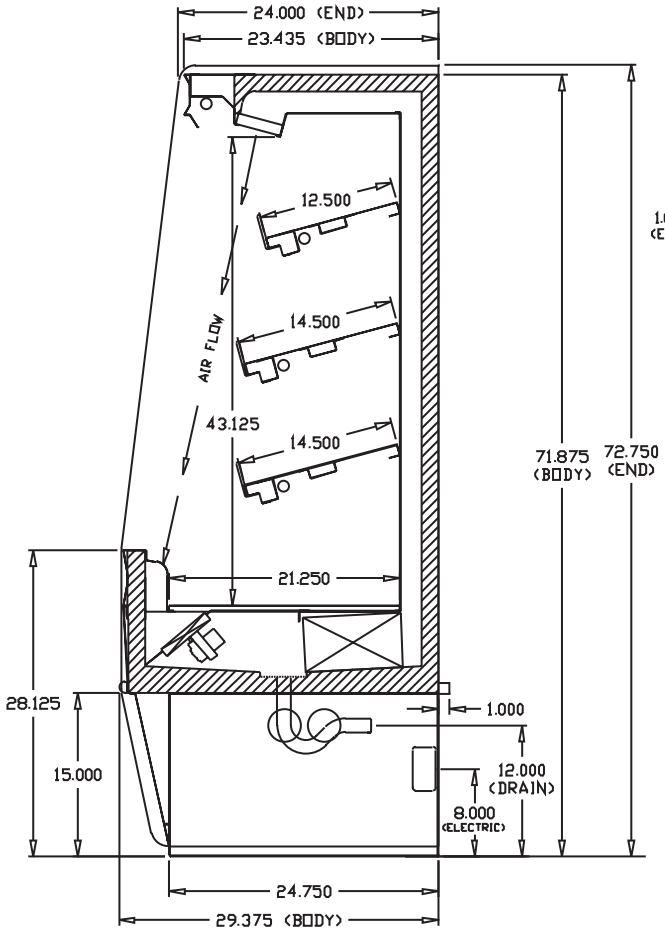

Cross Section

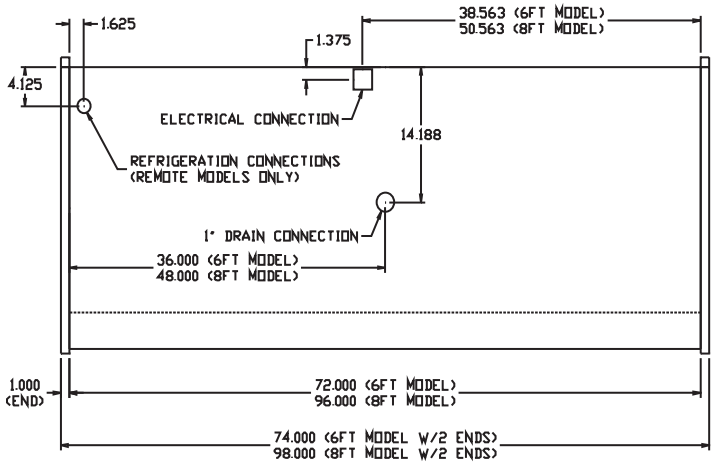

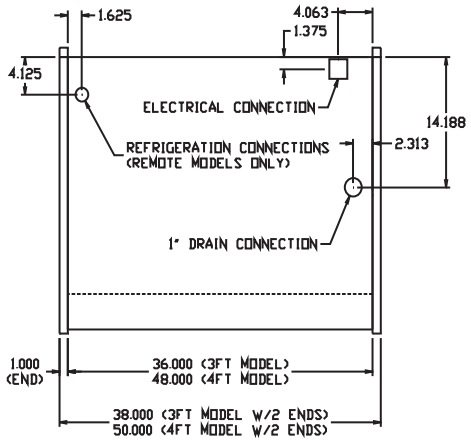

Plan View

A Division of HMC Enterprises LLC *• 2501 Grant Avenue • Philadelphia, PA 19114 USA*
(215) 464-6800 • 1-800-344-8222 • Fax (215) 969-4890 • E-Mail: sales@howardmccray.com • www.howardmccray.com