Howard-McCray

Open Merchandisers-32 Series
Endless Design - Produce Case with Shelf

• PRODUCT SPECIFICATIONS SHEETS

*Shown with optional storage bins

• Cases are designed to operate at 75 degrees Fahrenheit and 55% relative humidity

Self-Contained Remote	SC-P32E-4S R-P32E-4S	SC-P32E-6S R-P32E-6S	SC-P32E-8S R-P32E-8S
Length with ends	50"	74"	98"
Length without ends	48"	72"	96"
Height with ends	72-3/4"	72-3/4"	72-3/4"
Height without ends	71-7/8"	71-7/8"	71-7/8"
Depth with ends	29-3/8"	29-3/8"	29-3/8"
(Dimensions are +/-1/4")			

• Specification subject to change without notice

Howard-McCray

Open Merchandisers
32 Series – Endless Design - Produce Case with Shelf

Standard Specifications and Optional Features

CONSTRUCTION UL Classified to ANSI/NSF 7 Heavy gauge steel super structure Foamed in place CFC free foam Multi deck Endless design allows for continuous line up	**FINISHES** Designer white or black end panels Designer white or black front rail Designer white or black front color band Designer white or black end trim Coated galvanized rear
INTERIOR Designer white or black end panels Removable designer white or black floor pans Designer white or black perforated rear wall (*for even air distribution)* Full length lighting at top of unit 1 level of 14" shelving with product stop Telescoping display rack 2 levels of product display Over 50" of display area 14" Full length mirror to enhance product display Stylish tag molding on each shelf	**REFRIGERATION** R404A expansion valve system Low velocity fans located below deck area *(to insure even flow of air)* Pressure control maintains constant temperatures Automatic defrost controlled by time clock *(self contained units only)* Air screen technology Self contained system Copeland hermetic unit Remotes available
EXTERIOR Designer white or black ends and front Designer white or black color-band Designer white or black end trim Removable front grille allows for cleaning and servicing 1" designer gray bumper	**LIGHTING** 1 row at inside top of unit
ELECTRICAL REQUIREMENTS Unit must be hard wired UL/CUL listed See Tech page for details on voltage	***Important Note:* All refrigerated cases are designed to operate in an environment of 75 degrees and 55% relative humidity.** ***Important Note:* Product must be cooled before being displayed within the case.** ***Important Note:* DRAIN IS REQUIRED**

OPTIONAL FEATURES

Night covers Peg bars Step shelves Condensate pan-4' case only Insulated divider for line ups	4" of Plexiglas on end panel Stainless steel, laminated or paint Security cover Plexiglas divider for line ups Digital thermometer

(ALL WHITE OR ALL BLACK, NO EXTRA CHARGE—IF COLORS ARE MIXED AN ADDITIONAL CHARGE WILL APPLY)

c UL us LISTED — CLASSIFIED UL EPH ANSI/NSF 7

A Division of HMC Enterprises LLC • *2501 Grant Avenue • Philadelphia, PA 19114 USA*
(215) 464-6800 • 1-800-344-8222 • Fax (215) 969-4890 • E-Mail: sales@howardmccray.com • www.howardmccray.com

Howard-McCray

Open Merchandisers
32 Series – Endless Design - Produce Case with Shelf

Technical Data

Model	Self contained	SC- P32E-4S	SC-P32E-6S	SC-P32E-8S
	Remote	R-P32E-4S	R-P32E-6S	R-P32E-8S
Length with ends		50"	74"	98"
Length without ends		48"	72"	96"
Height with ends		72-3/8"	72-3/8"	72-3/8"
Height without ends		71-7/8"	71-7/8"	71-7/8"
Depth with ends		29-3/8"	29-3/8"	29-3/8"
(Dimensions are +/- 1/4")				
Operating temperature		38˚F to 41˚F	38˚F to 41˚F	38˚F to 41˚F
Refrigerant (expansion valve)	Self contained	R404A	R404A	R404A
Compressor size HP	Self contained	1/2	3/4	1
Pressure control settings				
@ 75˚F, 55%RH	CUT IN	88	88	88
	CUT OUT	54	54	54
Defrost per day (24 hours)	Air Defrost	3 @ 30 min.	3 @ 30 min.	3 @ 30 min.
BTU's at +20˚F Evap. Temp.	Remote	4000	6000	8000
Voltage		115V	115/208-230V	115/208-230V
Amperage	Self contained	12.7A	12.0A	13.8A
Amperage	Remote	1.8A	3.2A	3.8A
Cord and plug		No	No	No
Exterior color		White or Black	White or Black	White or Black
Interior color		White or Black	White or Black	White or Black
Inside end panels		White or Black	White or Black	White or Black
Floors		White or Black	White or Black	White or Black

(ALL WHITE OR ALL BLACK, NO EXTRA CHARGE—IF COLORS ARE MIXED AN ADDITIONAL CHARGE WILL APPLY)

SHIPPING INFORMATION

Height		76"	76"	76"
Depth		44"	44"	44"
Length		61"	87"	109"
Gross weight	Self contained	615#	825#	1097#
	Remote	490#	675#	922#
Cubic feet		118ft³	168ft³	211ft³

- **Cases are designed to operate at 75 degrees Fahrenheit and 55% relative humidity**
- **Cases are equipped with drains; check your local building codes for connection requirements.**
- **Specification subject to change without notice**

A Division of HMC Enterprises LLC *• 2501 Grant Avenue • Philadelphia, PA 19114 USA*
(215) 464-6800 • 1-800-344-8222 • Fax (215) 969-4890 • E-Mail: sales@howardmccray.com • www.howardmccray.com

Howard-McCray

Open Merchandisers
32 Series – Endless Design - Produce Case with Shelf

Technical Data • Side View • Plan View

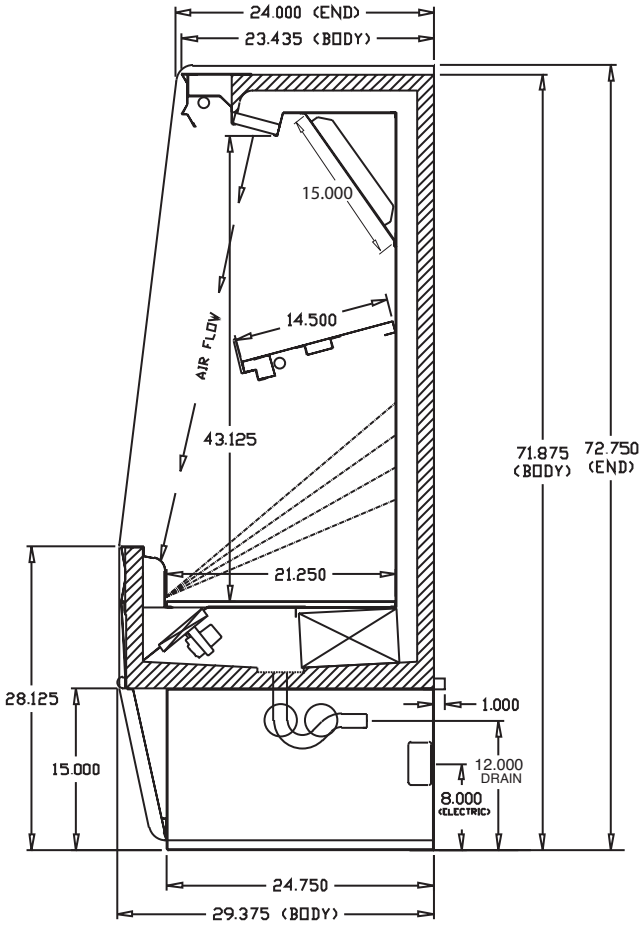

Cross Section

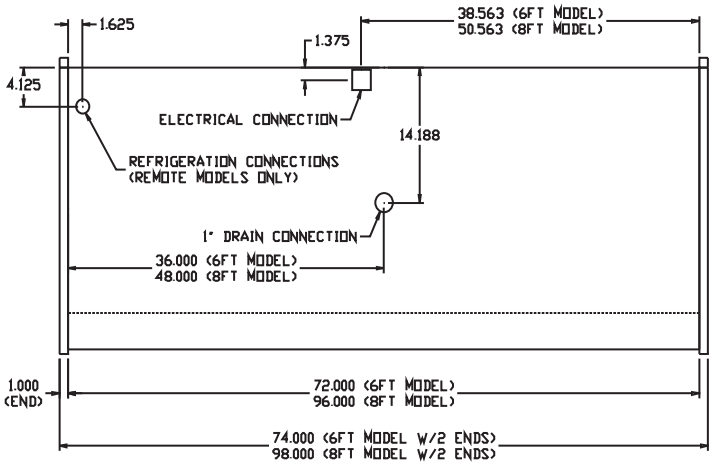

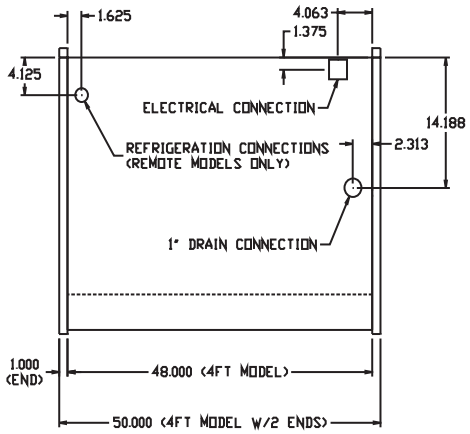

Plan View

A Division of HMC Enterprises LLC *• 2501 Grant Avenue • Philadelphia, PA 19114 USA*
(215) 464-6800 • 1-800-344-8222 • Fax (215) 969-4890 • E-Mail: sales@howardmccray.com • www.howardmccray.com