Electrolux

ITEM # _____

MODEL # _____

PROJECT NAME # _____

SIS # _____

AIA # _____

High Productivity Cooking Electric Tilting Kettles – 79 gal

High Productivity Cooking Electric Tilting Kettles – 79 gal

582583 (KUWKOEOOOO) Electric Tilting Kettle 79 gal – 208 V
582585 (KUYKOEOOOO) Electric Tilting Kettle 79 gal – 480 V

Short Form Specification

Item No. _____

Unit to be Electrolux Electric Tilting Kettle 79 gallon capacity. Electric characteristics to be ___208 V or ____480 V three phase. All stainless steel construction, full jacket including heat insulated external paneling. One piece deep drawn cooking vessel in 316 type stainless steel. Unit shall be floor mounted on two consoles with four adjustable stainless steel feet. Unit shall include motorized variable tilting of pan and fully insulated and counterbalanced closing lid. Cooking temperature and cooking time can be precisely set through state of the art control panel. Food sensor temperature built into base plate permits precise temperature cooking.

Covered by Electrolux Platinum Star® Service Program two-year parts and one-year labor warranty, installation start-up and performance check-up after one year from installation.

Approval: _____

Main features

- Round, tilting kettle is suitable to cook, sauté, poach or steam all kinds of produce.
- Produce is uniformly heated in the base and side walls of the kettle by steam hot water by an external jacket.
- Kettle shall be full jacketed including additional heat-insulated external paneling.
- Cooking vessel (one-piece deep drawn) in 316 stainless steel (11 gauge) featuring directional pouring lip. Double-jacket in 316 stainless steel (18 gauge) designed to operate at a pressure of 11.6 psi.
- The lid, mounted on the cross beam of the unit, shall be counterbalanced by a special hinge that remains open in all positions.
- Lid is double-lined, insulated in 304 stainless steel.
- Steam-source: self-contained with a booster injecting steam directly into double jacket.
- Controls are IPX5 (NEMA4) water resistance certified.
- Actual cooking/holding temperature can be precisely set through the control panel.
- Actual cooking/holding temperature setting and digital display.
- Cook time settings visible through the digital display
- Pressure in double-jacket visible through digital display.
- Built in food temperature sensor for precise control of cooking process.
- A SOFT setting for a gentle heat input, for delicate products thus avoiding undesired spillage.
- A HOLD setting where the food is initially cooked then held at a pre-set temperature.
- Firmly fitting insulated cover to reduce cooking time and save energy costs.
- Ergonomic: unique ratio vessel diameter and height; motor-assisted tilting.
- Offset tilting axle for convenient pouring height.
- Large directional pouring lip.
- Closed heating system – no waste of energy.
- Added safety: external heat-insulated paneling.
- Smooth large surfaces, easy access for cleaning.
- All pan internal surfaces ground and polished.
- Kettle vessel tilts over 90° for complete emptying/cleaning.

Optional Accessories

- Basket for kettles
- Strainer for tilting kettles

Electrolux Professional, Inc.
www.electroluxusa.com/professional
10200 David Taylor Drive, Charlotte, NC 28262 • Telephone Number: 866-449-4200 • Fax Number: 704-547-7401

Electrolux
High Productivity Cooking Electric Tilting Kettles – 79 gal

Electrolux

High Productivity Cooking
Electric Tilting Kettles – 79 gal

Front View

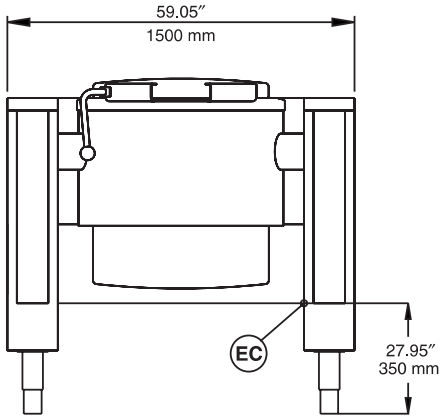

Top View

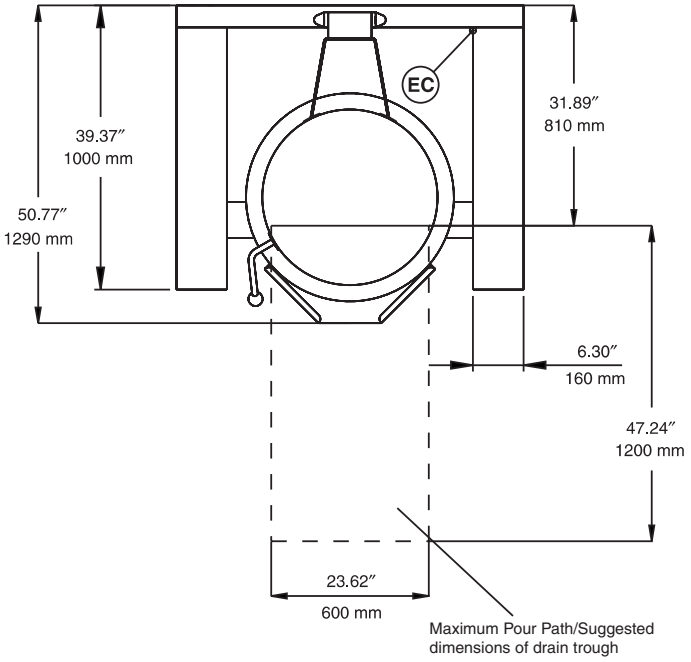

EC = Electrical connection

Side View

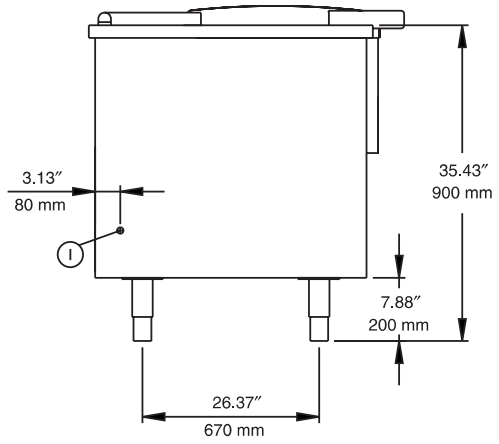

Electric

Supply voltage:	
582583 (KUWK0E0000)	208 V/3p/60Hz - 102A
582585 (KUYK0E0000)	480 V/3p/60Hz - 45A
Total Watts:	36.2 kW

Key Information

Distance to floor of pouring lip when tilted:	9-1/8″ (232 mm)
Working Temperature:	122 °F (50 °C MIN)
	212 °F (100 °C MAX)
Pan useful capacity:	79.25 gal (300 liters)
Vessel (round) diameter:	35-7/16″ (900 mm)
Vessel (round) depth:	22-7/16″ (570 mm)
Net weight:	860 lb (390 kg)
Shipping weight:	904 lb (410 kg)
Shipping width:	66-15/16″ (1700 mm)
Shipping height:	47-1/4″ (1200 mm)
Shipping depth:	51-3/16″ (1300 mm)
Shipping volume:	93.57 cu.ft. (2.65 m3)

No clearance needed on rear or sides of unit if wall is of non combustible type. If wall is combustible, minimum 2″ (50 mm) wall clearance should be maintained.

Water fill faucet/shower to be mounted close to unit for filling and cleaning (not supplied).

The company reserves the right to make modifications to the products without prior notice. All information correct at time of printing.

1-31-11