Electrolux

Pasta Solutions
Free-standing, Single-well
Pasta Cooker – Gas

ITEM # _____

MODEL # _____

PROJECT NAME # _____

SIS # _____

AIA # _____

Pasta Solutions
Free-standing, Single-well
Pasta Cooker – Gas

391201 (E9PCGD1MF2) Gas Pasta Cooker
120 V/1p/60z – 0.9A

Short Form Specification

Item No. _____

Unit to be Electrolux Single Well Gas Pasta Cooker 391201. The unit is a free-standing, 10.5 gallon, single well Gas Pasta Cooker. The unit shall feature constant water level refill and starch removal during cooking process. IPX 5 water jet protection (NEMA 4 equivalent). The 10.5 gallon tank is pressed in AISI 316 stainless steel and features only rounded corners. 5″ long, height adjustable legs. The unit to be completely in AISI 304 stainless steel.

Covered by Electrolux Platinum Star® Service Program two-year parts and one-year labor warranty, installation start-up and performance check-up after one year from installation.

Approval: _____

Main features

- 10.5 gallon tank.
- 9-position energy regulator.
- 3-position water fill regulator.
- Constant water level refill.
- Automatic starch removal function during cooking: improved water quality over time.
- Automatic low-water level shut-off: no accidental over-heating.
- Electrolux Platinum Star® Service package included:
  - 2-year parts, 1-year labor warranty, 5-year compressor warranty.
  - Start-up install check.
  - Equipment check-up after 12 month from installation.

Construction

- Pressed 10.6 gal tank: only rounded corners for improved cleanability.
- AISI 316 stainless steel tank: maximum corrosion resistance.
- All stainless steel construction.
- IPX 5 water jet protection (NEMA 4 equivalent).

Included Accessories

- 5″ long, height adjustable legs.

Optional Accessories

- Bulk cooking basket.
- 2 of 1/2 size bulk cooking baskets.
- 3 of 1/3 size bulk cooking baskets.
- 3 of round individual-portion baskets.
- False bottom for round individual-portion baskets.
- Castors.

Electrolux Professional, Inc.
www.electroluxusa.com/professional
10200 David Taylor Drive, Charlotte, NC 28262 • Telephone Number: 866-449-4200 • Fax Number: 704-547-7401

Electrolux
Pasta Solutions
Free-standing, Single-well Pasta Cooker – Gas

Electrolux

Pasta Solutions
Free-standing, Single-well
Pasta Cooker - Gas

Front View

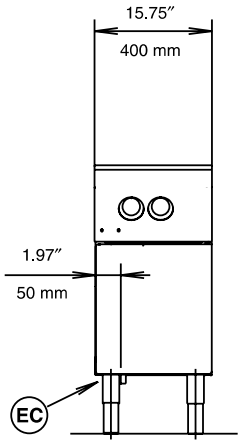

Top View

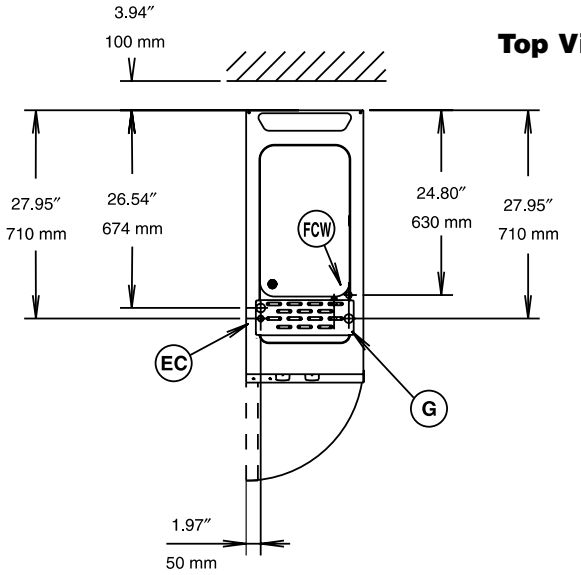

EC = Electrical connection
G = Gas connection
FCW = Filtered Cold Water Inlet

Side View

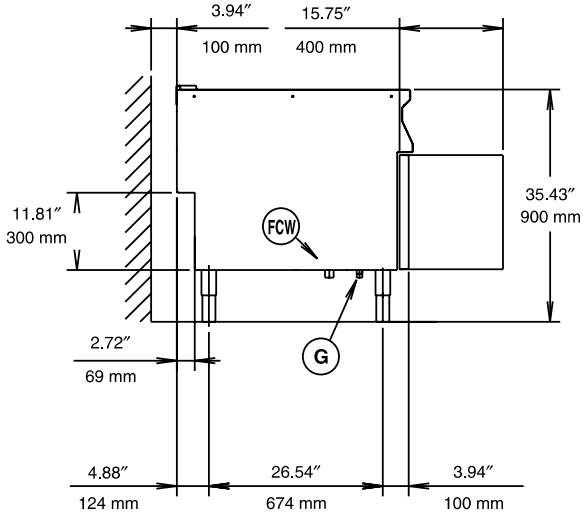

Electric

Supply voltage:	
391201 (E9PCGD1MF2)	120 V/1p/60Hz - 0.9 A
Connected load:	3 kW

Gas (Natural or LPG)

ISO 7/1 Gas connection diameter:	1/2″ NPT
Nominal Thermal load:	BTU 53,000 (15.5 kW)
Pressure	
Natural Gas:	4″ w.c. (10 mbar)
LPG:	10″ w.c. (25 mbar)

Water

Water inlet "CW" – 1/2″ connection:

Total hardness:	5-50 ppm
Drain "D"	1″ connection

Electrolux *recommends the use of treated water, based on testing of specific water conditions.*

Please refer to user manual for detailed water quality information.

Installation

Clearance:	4″ (10 cm) from back.

Capacity

Max.:	10.5 gal
Min.:	8.5 gal

Key Information

Net weight:	137 lbs. (62 kg)
Height, inch/mm:	33-7/16″ (849 mm)
Width, inch/mm:	15-3/4″ (400 mm)
Depth, inch/mm:	35-7/16″ (900 mm)
Shipping weight:	170 lbs. (77 kg)
Shipping width:	19″ (480 mm)
Shipping height:	44.1″ (1120 mm)
Shipping depth:	41″ (1040 mm)
Shipping volume:	19.8 cu. ft. (0.56 m³)

The company reserves the right to make modifications to the products without prior notice. All information correct at time of printing.

12-26-11