Electrolux

EM Series
6 Open Gas Burner Range with Static Oven 36"

ITEM # _____

MODEL # _____

PROJECT NAME # _____

SIS # _____

AIA# _____

EM Series

6 Open Gas Burner Range with Static Oven 36"

169005 (ACFG36)	6 OPEN GAS BURNER RANGE WITH STATIC OVEN 36" (915 mm)
169039 (ACFG36T)	6 OPEN GAS BURNER RANGE WITH STATIC OVEN 36" (915 mm) WITH THERMOCOUPLES

Short Form Specification

Item No. _____

Unit to be Electrolux Six (6) Open Gas Burner Range with Static Oven ___ without flame failure safety on open burners (model # 169005), ___ with flame failure safety on open buners (model # 169039). Individually controlled high efficiency 32,500 BTU (9.5 kW) Flower Flame burners. Control knobs provide smooth, continuous rotation from min to max. Suitable for natural gas or propane gas. Cast iron pan supports 12" x 12" (305 mm x 305 mm). Full width crumb tray below the burners. All major components can be accessed from the top and front of the appliance for ease of maintenance. Worktop in AISI 304 Stainless Steel. Front and side panels in Stainless Steel with Scotch Brite finish. Special heavy duty chrome plated knobs for durability and easy cleaning. The configuration of bezels and knobs provides high level of protection against water infiltrations. Right-angled side edges to allow flush fitting between units. Supplied with 6" (150 mm) height adjustable, removable legs. Unit may be installed on castors. 24" (610 mm) static oven 34,000 BTU/hr (10 kW) with unique baffle above the burner distributes heat to provide even cooking temperatures throughout the cavity. Vitreous enammelled oven interior accomodates two standard Imperial full size 18" x 26" (457 mm x 660 mm) sheet pans. The interior is 19-1/2" w x 26-3/4" d x 15" h (497 mm w x 680 mm d x 380 mm h). 100% safety pilot. Manual oven shut-off valve. Heavy duty thermostat with temperature range from 158°F to 590°F (70°C to 310°C). Oven supplied with two stainless steel tray racks.

Intertek Intertek

Approval: _____

Main Features

Open Burner Information:

- Six (6) individually controlled high efficiency 33,000 BTU (9.5 kW) Flower Flame gas burners.
- Control knobs provide smooth, continuous rotation from min to max.
- No gaskets and removable one-piece venturis and burners for easy cleaning.
- The geometrics of the venturis and cast iron burners provides the maximum level of heating efficiency.
- The cast iron burners are anti-clogging.
- The cast iron pan supports 12" x 12" (305 mm x 305 mm), thanks to the special configuration, allow for even small pots and pans to be placed over the flame.
- The cast iron pan supports allow to slide pots and pans from section to section as well as to protect the pilot from spilled food and debris.
- Full width crumb tray below the burners captures all overflow and debris and can be easily extracted for dumping and cleaning.
- Unit with thermocouple and flame failure device protects against accidental extinguishing of the flame (model # 169039).
- All major components can be accessed from the top and front of the appliance for ease of maintenance.

Oven Information:

- 24" (610 mm) static oven 34,000 BTU/hr (10 kW) with unique baffle above the burner distributes heat to provide even cooking temperatures throughout the cavity.
- Vitreous enameled oven interior accommodates two standard Imperial full size 18" x 26" (457 mm x 660 mm) sheet pans.
- The interior is 19-1/2" w x 26-3/4" d x 15" h (497 mm w x 680 mm d x 380 mm h).
- 100% safety pilot.
- Manual oven shut-off valve.
- Heavy duty thermostat with temperature range from 158°F to 590° F (70°C to 310°C).
- Oven supplied with two stainless steel tray racks.

General Information:

- Worktop in AISI 304 Stainless Steel.
- Front and side panels in Stainless Steel with Scotch Brite finish.
- Special heavy duty chrome plated knobs for durability and easy cleaning.
- The configuration of bezels and knobs provides high level of protection against water infiltrations.
- Right-angled side edges to allow flush fitting between units.
- Provided with kit for side-by-side connection between units for minimizing gaps and possible dirt traps.
- Supplied with 6" (150 mm) height adjustable, removable legs.
- Unit may be installed on castors.
- Included Accessories: propane converter kit, pressure regulator and main shut off valve.

Optional Accessories

- 4 castors kit for open and oven bases - 2 swivelling with brakes — PNC 206135 ❑

Electrolux Professional Inc.
www.electroluxusa.com/professional
www.electrolux.com/foodservice
foodservice@electrolux.com

Electrolux
EM Series
6 Open Gas Burner Range with Static Oven 36"

Electrolux

EM Series
6 Open Gas Burner Range with Static Oven 36"

Front

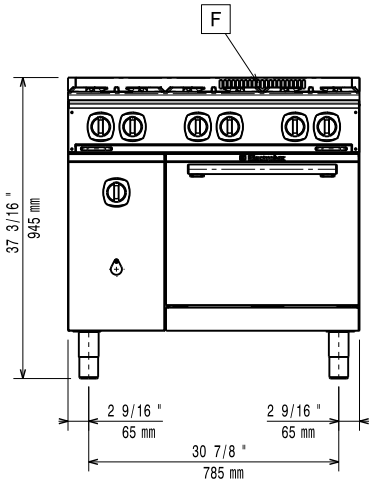

Top

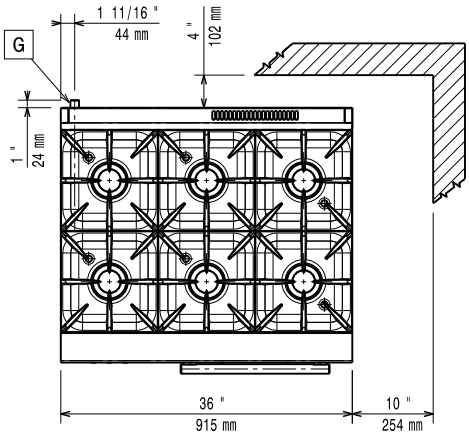

G = Gas connection

Side

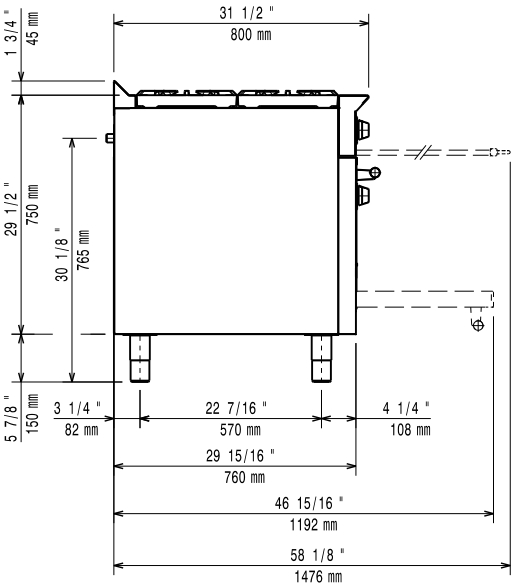

Gas

Gas Power:	
169005(ACFG36)	229000 Btu/hr (67 kW)
169039(ACFG36T)	229000 Btu/hr (67 kW)
Gas Inlet:	3/4" NPT
Natural Gas Pressure:	3''w.c. (7 mbar)
Propane Gas Pressure:	7''w.c. (18 mbar)

Key Information

Oven working Temperature:	158 °F (70 °C) MIN - 590 °F (310 °C) MAX
Oven Cavity Dimensions (width):	19 9/16" (497 mm)
Oven Cavity Dimensions (depth):	26 3/4" (680 mm)
Oven Cavity Dimensions (height):	14 15/16" (380 mm)
External dimensions, Width	36 1/32" (915 mm)
External dimensions, Depth	31 1/2" (800 mm)
External dimensions, Height	37 3/16" (945 mm)
Net weight:	355 lbs (161 kg)
Shipping width:	
169005(ACFG36)	35 7/8" (911 mm)
169039(ACFG36T)	35 7/8" (1030 mm)
Shipping depth:	
169005(ACFG36)	38 11/16" (983 kg)
169039(ACFG36T)	38 11/16" (940 kg)
Shipping height:	
169005(ACFG36)	45 7/16" (1154 mm)
169039(ACFG36T)	45 7/16" (1180 mm)
Shipping weight:	
169005(ACFG36)	386 lbs (175 kg)
169039(ACFG36T)	386 lbs (218 kg)
Shipping volume:	36.49 ft³ (1.03 m³)

* The rear and side clearances shown on the diagram indicate the minimum distances reccomeneded from the appliance to combustible surfaces.

The company reserves the right to make modifications to the products without prior notice. All information correct at time of printing.

2011.10.14