Electrolux

EM Series
Ribbed Gas Griddle Top 12"

ITEM # _____

MODEL # _____

PROJECT NAME # _____

SIS # _____

AIA# _____

EM Series

Ribbed Gas Griddle Top 12"

169016 (ARG12FR)	COMPACT LINE RIBBED GAS GRIDDLE TOP 12" (305 mm) - FULLY RIBBED - NATURAL/PROPANE GAS

Short Form Specification

Item No. _____

Unit to be Electrolux Compact Line Ribbed Gas Griddle Top with single high efficiency 26,000 BTU (7,6 kW) burner. Suitable for natural gas or propane gas. Thick 1" (25 mm) highly polished mild steel griddle plate maintains selected temperatures and assures quick recovery. Stainless steel grease trough, one piece rolled front. Single removable grease collector drawer. Insulated cooktop to conserve energy. Front, side and top panels of unit in Stainless steel with Scotch Brite finish. Unit has right-angled side edges to allow flush-fitting junction between units.

In North America, products are covered by Electrolux Platinum Star® Service Program two-year parts and one-year labor warranty, installation start-up and performance check-up after one year from installation.

Intertek Intertek

Approval: _____

Main Features

- Single high efficiency 26,000 BTU (7,6 kW) burners.
- Thick 1" (25 mm) highly polished mild steel griddle plate maintains selected temperatures and assures quick recovery.
- Stainless steel grease trough, one piece rolled front.
- Single removable grease collector drawer.
- Insulated cook top to conserve energy.
- Flame failure device to protects against accidental extinguishing of the flame.
- All major components can be accessed from the front for ease of maintenance.
- Front, side and rear panels in Stainless Steel with Scotch Brite finish.
- Right-angled side edges to allow flush fitting joints between units, eliminating gaps and possible dirt traps.
- Kit for installation of top units to neutral bases and cupboards provided as standard.
- Included Accessories: propane converter kit, pressure regulator.

Optional Accessories

- 4 pins kit for equipment to be installed on Refrigerator/freezer bases — PNC 169048 ❑

Electrolux Professional Inc.
www.electroluxusa.com/professional
www.electrolux.com/foodservice
foodservice@electrolux.com

Electrolux
EM Series
Ribbed Gas Griddle Top 12"

Electrolux

EM Series
Ribbed Gas Griddle Top 12"

Front

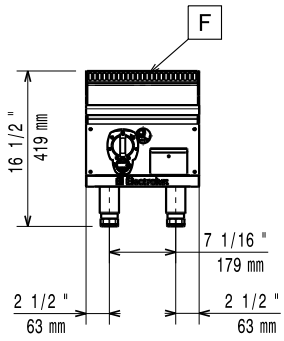

Top

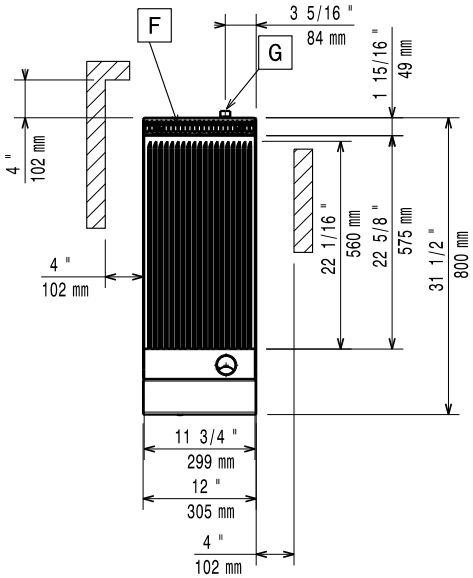

G = Gas connection

Side

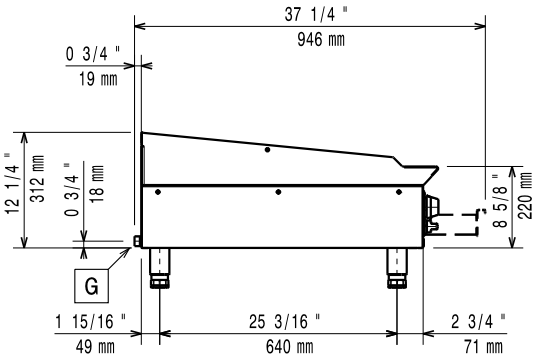

Gas

Gas Power:	
169016(ARG12FR)	26000 Btu/hr (7.6 kW)
Gas Inlet:	3/4" NPT
Natural Gas Pressure:	4''w.c. (10 mbar)
Propane Gas Pressure:	7''w.c. (18 mbar)

Key Information

Cooking Surface Width:	11 3/4" (299 mm)
Cooking Surface Depth:	22 5/8" (575 mm)
Working Temperature MIN:	194 °F (90 °C)
Working Temperature MAX:	500 °F (260 °C)
Net weight:	82 lbs (37 kg)
Shipping width:	35 7/16" (900 mm)
Shipping depth:	14 " (355 kg)
Shipping height:	25 1/2" (648 mm)
Shipping weight:	93 lbs (42 kg)
Shipping volume:	7.31 ft³ (0.21 m³)

* Reccomended rear clearance of 4''(102 mm).

The company reserves the right to make modifications to the products without prior notice. All information correct at time of printing.

2011.10.14