Electrolux

EM Series
Ribbed Gas Griddle Top 48"

ITEM # _____

MODEL # _____

PROJECT NAME # _____

SIS # _____

AIA# _____

EM Series

Ribbed Gas Griddle Top 48"

169019 (ARG48FR)	COMPACT LINE RIBBED GAS GRIDDLE TOP 48 " (1220 mm) - 1/3 RIBBED - NATURAL/PROPANE GAS

Short Form Specification

Item No. _____

Unit to be Electrolux Compact Line Ribbed Gas Griddle Top with four individually controlled high efficiency 26,000 BTU (7,6 kW) burners. Suitable for natural gas or propane. Thick 1" (25 mm) highly polished mild steel griddle plate maintains selected temperatures and assures quick recovery. Stainless steel grease trough, one piece rolled front. Two large 1 gal. (3.8 lt) removable grease collector drawers. Insulated cooktop to conserve energy. Front, side and top panels of unit in Stainless steel with Scotch Brite finish. Unit has right-angled side edges to allow flush-fitting junction between units.
In North America, products are covered by Electrolux Platinum Star® Service Program two-year parts and one-year labor warranty, installation start-up and performance check-up after one year from installation.

Intertek Intertek

Approval: _____

Main Features

- Four individually controlled high efficiency 26,000 BTU (7,6 kW) burners.
- Thick 1" (25 mm) highly polished mild steel griddle plate maintains selected temperatures and assures quick recovery.
- Stainless steel grease trough, one piece rolled front.
- Two large 1 gal. (3.8 lt) removable grease collector drawers.
- Insulated cook top to conserve energy.
- Flame failure device to protects against accidental extinguishing of the flame.
- All major components can be accessed from the front for ease of maintenance.
- Front, side and rear panels in Stainless Steel with Scotch Brite finish.
- Right-angled side edges to allow flush fitting joints between units, eliminating gaps and possible dirt traps.
- Kit for installation of top units to neutral bases and cupboards provided as standard.
- Included Accessories: propane converter kit, pressure regulator.

Optional Accessories

- 4 pins kit for equipment to be installed on Refrigerator/freezer bases — PNC 169048 ❑
- - NOT TRANSLATED - — PNC 169049 ❑

Electrolux Professional Inc.
www.electroluxusa.com/professional
www.electrolux.com/foodservice
foodservice@electrolux.com

Electrolux
EM Series
Ribbed Gas Griddle Top 48"

Electrolux

EM Series
Ribbed Gas Griddle Top 48"

Front

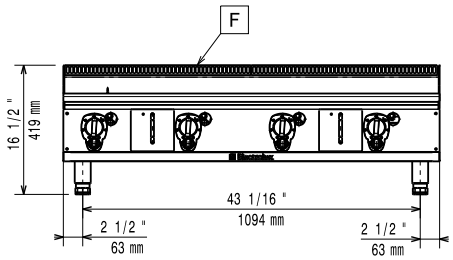

Top

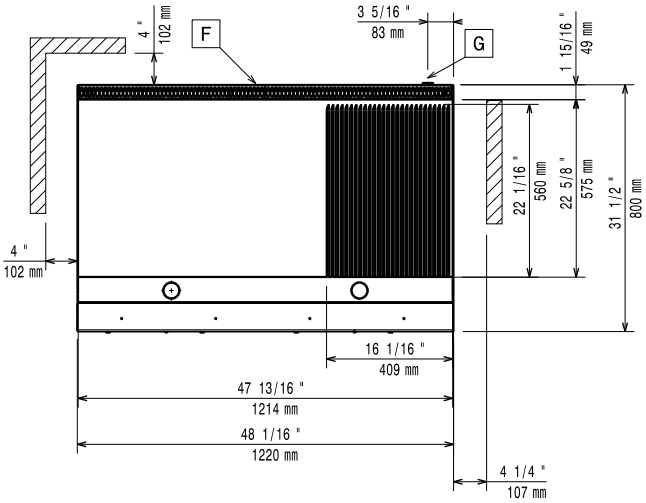

G = Gas connection

Side

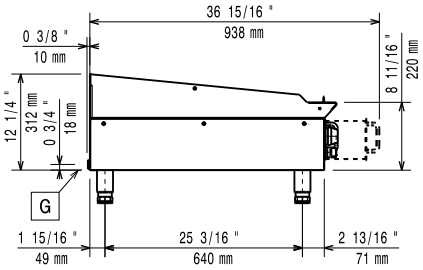

Gas

Gas Power:	
169019(ARG48FR)	104000 Btu/hr (30.4 kW)
Gas Type Option:	Propane (must be specified when ordered)
Gas Inlet:	3/4" NPT
Natural Gas Pressure:	4''w.c. (10 mbar)
Propane Gas Pressure:	7,2''w.c. (18 mbar)

Key Information

Cooking Surface Width:	47 13/16" (1214 mm)
Cooking Surface Depth:	22 5/8" (575 mm)
Working Temperature MIN:	194 °F (90 °C)
Working Temperature MAX:	500 °F (260 °C)
Net weight:	313 lbs (142 kg)
Shipping width:	35 7/16" (900 mm)
Shipping depth:	50 " (1270 kg)
Shipping height:	25 1/2" (648 mm)
Shipping weight:	348 lbs (158 kg)
Shipping volume:	26.15 ft³ (0.74 m³)

If appliance is set up or next to or against temperature sensitive furniture or similar, a safety gap of approximately 6'' (150 mm) should be maintained or some form of heat insulation fitted.

The company reserves the right to make modifications to the products without prior notice. All information correct at time of printing.

2011.10.14